CHEMISTRY THAT MATTERS™

LIGHT WEIGHTING AND THERMAL MANAGEMENT SOLUTIONS FOR ELECTRIC VEHICLE BATTERY PACK WITH SPECIALTY MATERIALS

Naajein Cherat, Nilajkar Vasudev, Hari Sharma, Nitesh Sheth, Arunachala P, Priya S, Saibal K B, Somasekhar Bobba*

SABIC's Specialties Business

A SOLUTION PROVIDER FOR ADVANCED CHALLENGES

LET'S PICTURE INNOVATION

APPLICATION REQUIREMENTS FOR BATTERY HOUSINGS

FR

- Non- Cl, Br FR V0 ≥ 0.8 mm preferred

MECHANICAL

- High stiffness and impact strength
- Low temperature impact resistance
- Weld-line strength

PHYSICAL

- Dimensional stability (low warpage)
- Chemical resistance, e.g., electrolyte, coolants
- Compatible with secondary ops. e.g., UV curing
- Good processability → High flowability
- Lightweight (low density)

ELECTRICAL

- Electrically insulating
- Thermal resistance (RTI w/ impact >100 °C)

BATTERY HOUSINGS
Impact strength and stiffness

SPECIALTY MATERIALS FOR BATTERY ENCLOSURES

		NORYL™ NHP5054 resin	NORYL™ GTX4610 resin
RUNNING APPLICATIONS		Battery Enclosure	Battery Enclosure
PROPERTIES		High Stiffness	Impact & FR
POLYMER CHARACTERISTICS	CHEMISTRY	PPE / HIPS-GF20	PPE/Nylon blend-GF10
	STRUCTURE	Amorphous	Amorphous | Semi-crystalline
	DENSITY	1,30 g/cm³	1,21 g/cm³
SAFETY	FLAME PERFORMANCE (UL94)	V0 ≥ 0.75 mm	V0 ≥ 1.5 mm
	ELECTRICAL PERFORMANCE TRACKING RESISTANCE (UL 746)	CTI PLC 3	CTI PLC 1

Manufacturability and optimization with multi-material solutions – to drive longer distances

APPLICATION REQUIREMENTS FOR BATTERY MODULE ENCLOSURES & BRACKETS

FR
- Non- Cl, Br FR V0 ≥ 0.8 mm preferred

MECHANICAL
- High stiffness and impact strength
- Low temperature impact resistance
- Weld-line strength

PHYSICAL
- Dimensional stability (low warpage)
- Chemical resistance, e.g., electrolyte, coolants
- Compatible with secondary ops. e.g., UV curing
- Good processability → High flowability
- Lightweight (low density)

ELECTRICAL
- Electrically insulating
- Thermal resistance (RTI w/ impact >100 °C)

MODULE ENCLOSURES / MILD HYBRID BATTERY HOUSINGS
Impact strength and stiffness

MODULE COVERS
High processing - flowability

MODULE BRACKETS
Stiffness and impact strength

SPECIALTY MATERIAL PROPERTIES FOR BATTERY MODULE ENCLOSURES & BRACKETS

				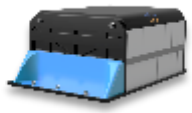	
		NORYL™ NHP5054 resin	NORYL™ NHP6011 resin	NORYL™ GTX4610 resin	CYCOLOY™ CX7240 resin
RUNNING APPLICATIONS		Mild hybrid battery housing	NEW End plates	Module bracket	Module top covers
PROPERTIES		High Stiffness	Robust FR	Impact & FR	High flow
POLYMER CHARACTERISTICS	CHEMISTRY	PPE / HIPS-GF20	PPE blend-GF8	PPE/Nylon blend-GF10	PC EXL/ ABS blend
	STRUCTURE	Amorphous	Amorphous	Amorphous | Semi-crystalline	Amorphous
	DENSITY	1,30 g/cm³	1,16 g/cm³	1,21 g/cm³	1,2 g/cm³
SAFETY	FLAME PERFORMANCE (UL94)	V0 ≥ 0.75 mm	V0 ≥ 1.5 mm	V0 ≥ 1.5 mm	V0 ≥ 0.75 mm
	ELECTRICAL PERFORMANCE TRACKING RESISTANCE (UL 746)	CTI PLC 3	CTI PLC 2	CTI PLC 1	CTI PLC 3

EV BATTERY MODULE APPLICATIONS

		 THERMOCOMP™ 9F005P compound	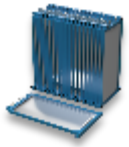 NORYL™ N1050 resin	 NORYL™ NHP6012 resin NEW
RUNNING APPLICATIONS		Cell retainer	Spacers	Busbar frame
PROPERTIES		Dimensional stability	Chemical resistance	FR downgauging
POLYMER CHARACTERISTICS	CHEMISTRY	PC-Blend GF	PPE / HIPS	PPE / HIPS
	STRUCTURE	Amorphous	Amorphous	Amorphous
	DENSITY	1,30 g/cm³	1,11 g/cm³	1,19 g/cm³
SAFETY	FLAME PERFORMANCE (UL94)	V0 ≥ 0.75 mm	V0 ≥ 1.5 mm	V0 ≥ 1.5 mm
	ELECTRICAL PERFORMANCE TRACKING RESISTANCE (UL 746)	CTI PLC 3	CTI PLC 2	CTI PLC 2
PROCESSING	FLOWABILITY MFI	56 g/10min	25 g/10min	25 g/10min

APPLICATION REQUIREMENTS FOR EV BATTERY MODULE PARTS

FR
- Non- Cl, Br FR V0 ≥ 0.8 mm preferred
- V0 ≥ 1.5 mm must

MECHANICAL
- High stiffness and impact strength
- Crash resistance

PHYSICAL
- Dimensional stability (low warpage)
- Chemical resistance, e.g., electrolyte, coolants
- Good processability → High flowability
- Hydrolytic stability

ELECTRICAL
- Tracking resistance: min. CTI PLC 2
- Thermal resistance (RTI w/ impact >100 °C)
- Electrical insulation

CELL FRAME

BUSBAR-HOLDER

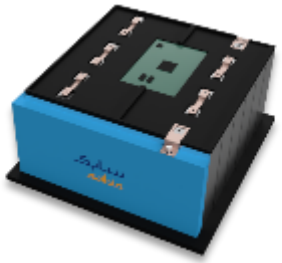

CYLINDRICAL CELL RETAINER

END PLATE

TREND: Increasingly strict UL94 FR requirements

STRUCTURAL AND IMPACT REQUIREMENTS

OPTIMIZE TO DRIVE LONGER – LIGHT WEIGHTING WITH MULTILATERAL SOLUTIONS

Open resource/Regulations review | Concept Ideation | Design development | Validation

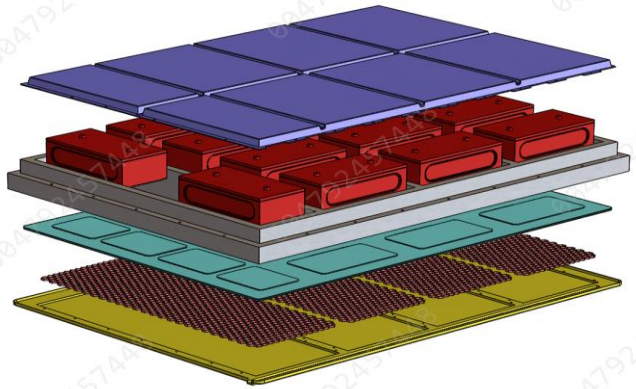

Modular approach for battery enclosure using thermoplastic solutions

- Light weight
- Repeatability
- Ease of manufacturability by reducing the machine tonnage and number of feed drops

Multi material approach for battery enclosure

- Light weight
- Improved performance

CAE Simulations

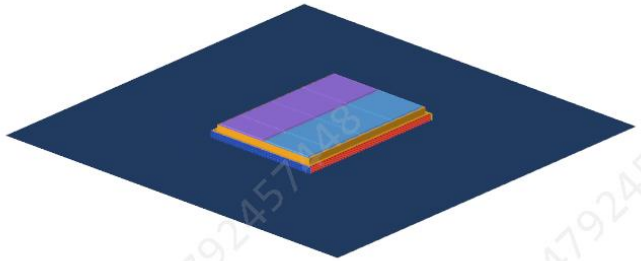

Drop Test
Drop Height 1m

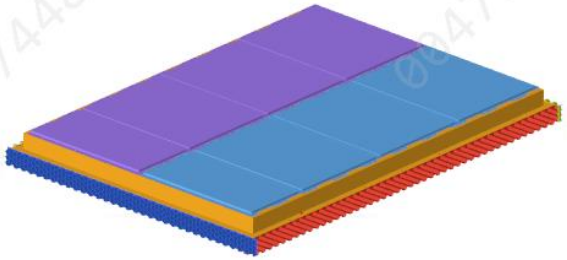

Shock Loads
25G acceleration in 15ms duration

Stone Penetration
High Speed Impact

No permanent damage observed in all simulated load conditions

PERFORMANCE EVALUATION – CAE SIMULATIONS

Shock Loads

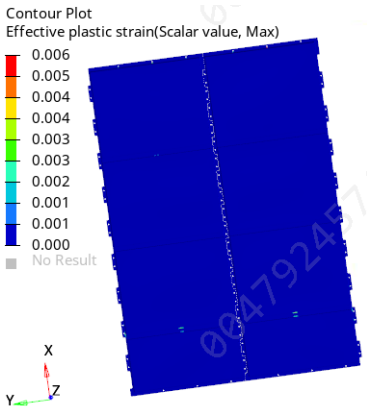

Aluminum top cover

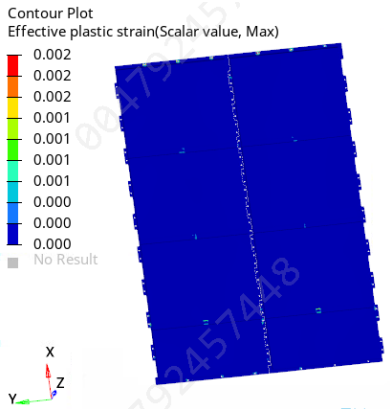

Thermoplastic (NORYL™ 5054 resin) top cover

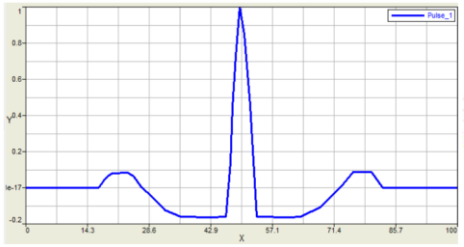

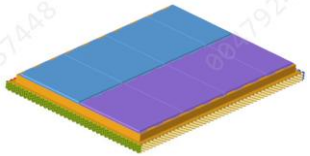

25G acceleration applied in vertical axes in 15ms duration

Drop Test

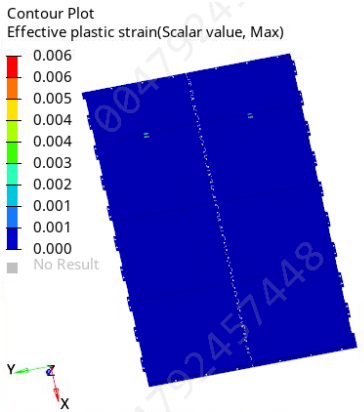

Aluminum top cover

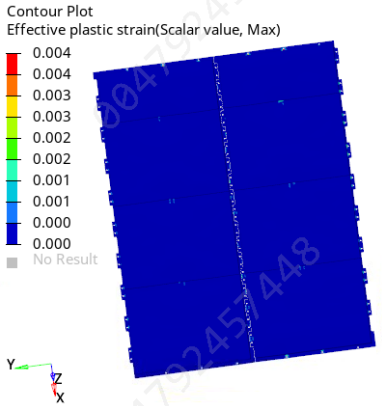

Thermoplastic (NORYL™ 5054 resin) top cover

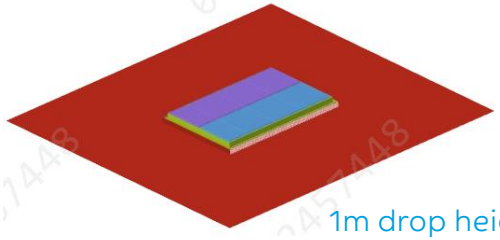

1m drop height (flat drop)

Stone Penetration

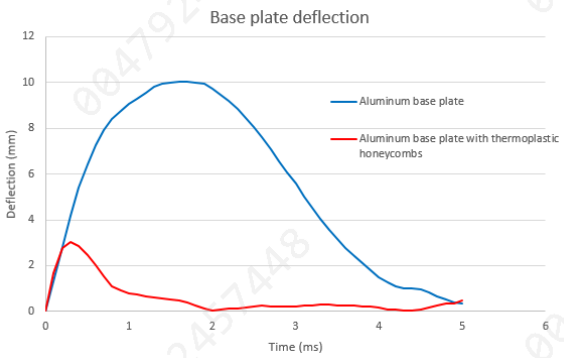

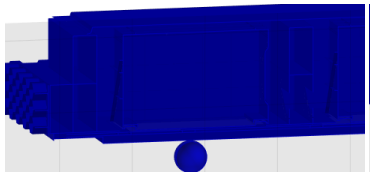

Aluminum base plate

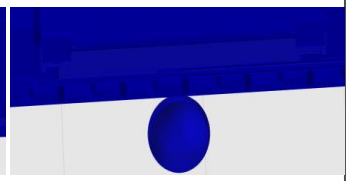

Aluminum base plate with thermoplastic (NORYL™ 5054 resin) honeycomb

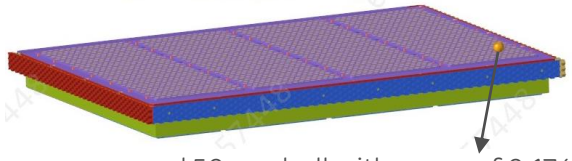

ϕ50mm ball with mass of 0.176 Kg and velocity 17.78 m/s

Thermoplastic solution is observed to perform similar/better compared to incumbent aluminum

ROCKER REINFORCEMENT FOR EV BATTERY CRASH PROTECTION

KEY APPLICATION REQUIREMENTS

Low temperature energy absorption

- NORYL GTX™ resin honeycomb (HC) based hybrid solution absorbs robust energy, especially down in a range of -20 to -40 °C

E-coat capability

- High heat resistance to withstand the high temperatures required in e-coating process (180 to 220 °C over 30 mins)

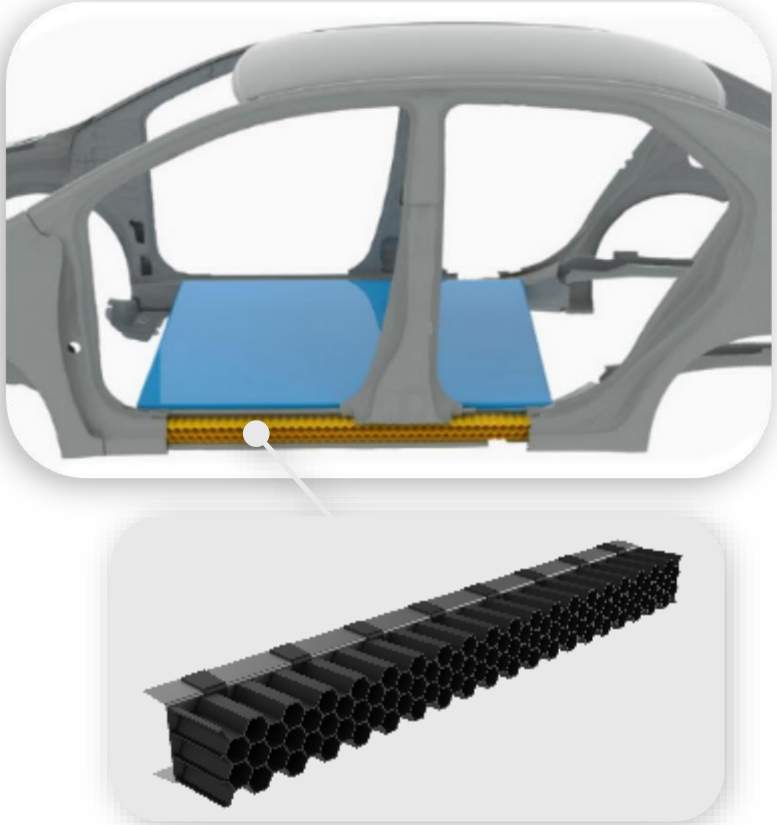

CRASH ELEMENTS TO PROTECT VEHICLE BATTERY DURING IMPACT

ENABLING TECHNOLOGY

NORYL GTX resin

- Balance of heat resistance, low temperature impact and flow

Global Application Technology support

- Design, testing, processing, material expertise

NORYL GTX resin addresses the critical assembly requirements before & after e-coat process

THERMAL LOADS

THERMAL MANAGEMENT SOLUTIONS USING SPECIALTY MATERIALS

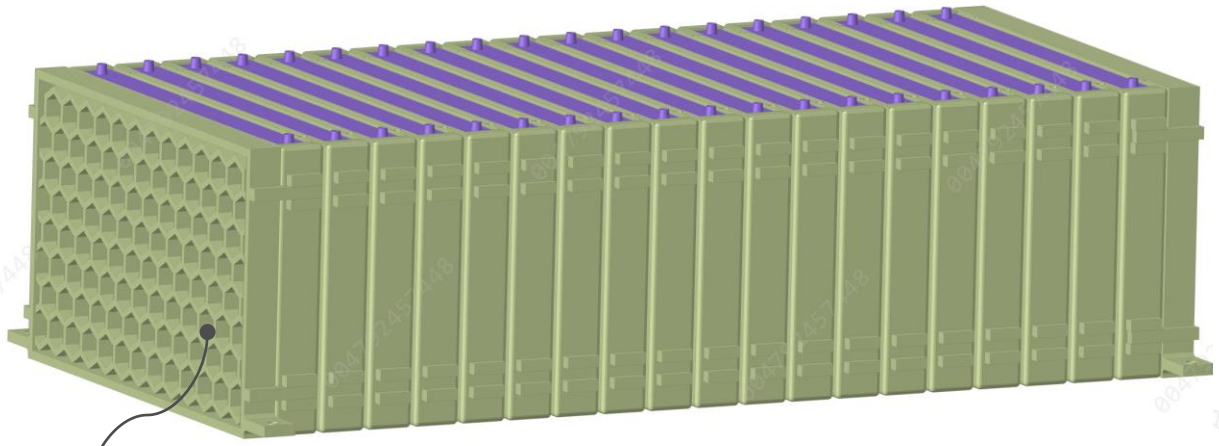

End Plates
Material : NORYL™ NHP5054 resin

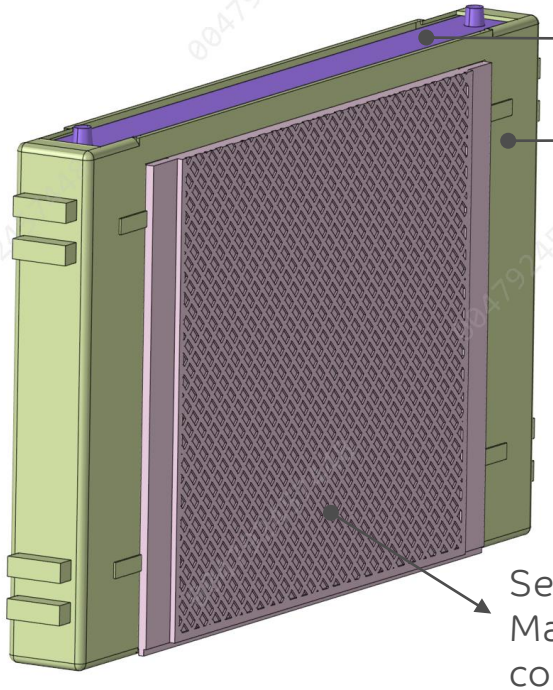

Cell

Cell Holder
Material : NORYL™
NHP5054 resin

Separator
Material: LNP™ KONDUIT™
compound

Repeating units of cell, cell holder, separator held together with the help of endplates

CASE SETUP AND BOUNDARY CONDITIONS

Solver	FloEFD V 20.2
Governing equations	Mass, Momentum, & Energy
Radiation	Discrete Order
Ambient Condition	T_{amb}= 25 °C, 1 atm pressure

Cells are assigned with 1 kW of heat power in the form of volumetric heating with uniform heat generation within the cell volume.

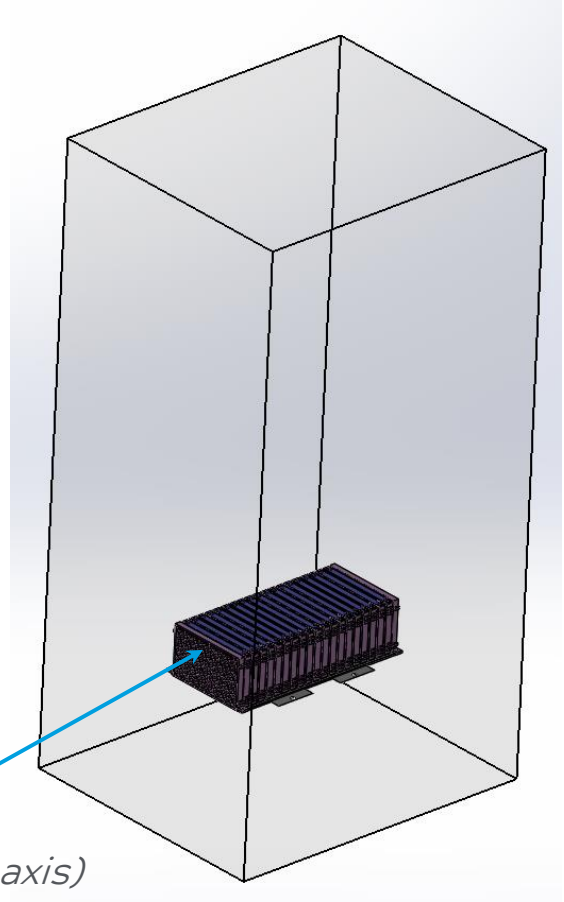

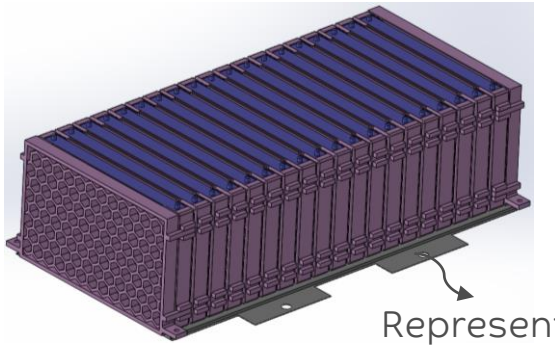

All the boundaries of the computational domain are assumed to be exposed to ambient air at T_{amb} & 1 atm pressure

PERFORMANCE EVALUATION – CAE SIMULATIONS

Temperature profile at module level

Conductive thermoplastic solution for separators (LNP™ KONDUIT™ PX13012 compound)

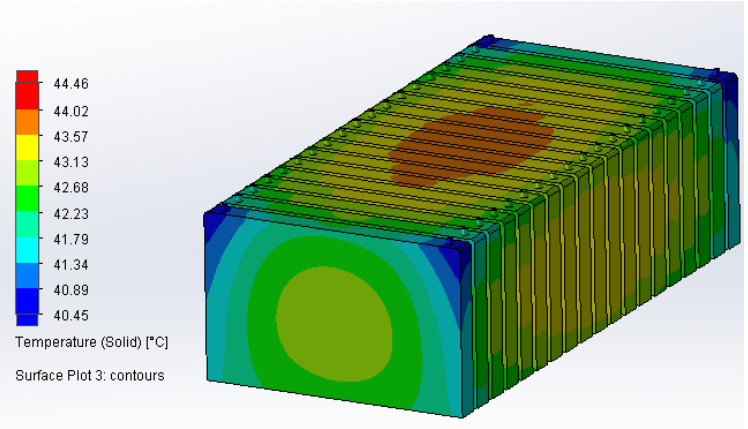

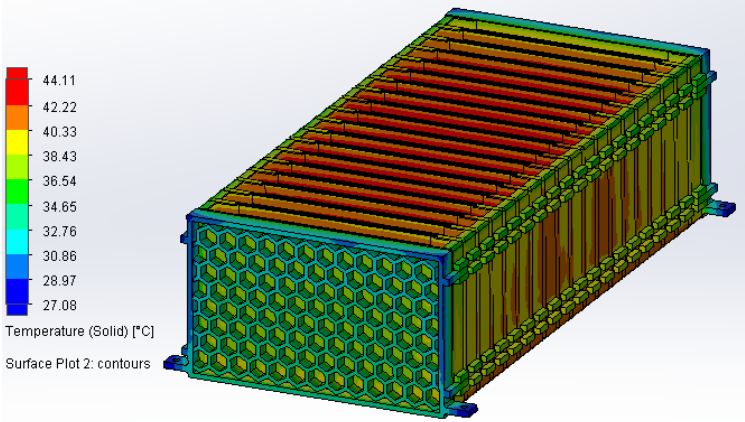

Aluminum separator

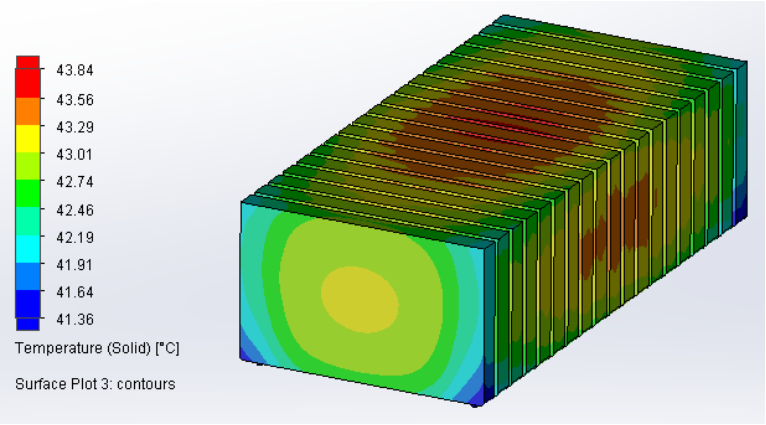

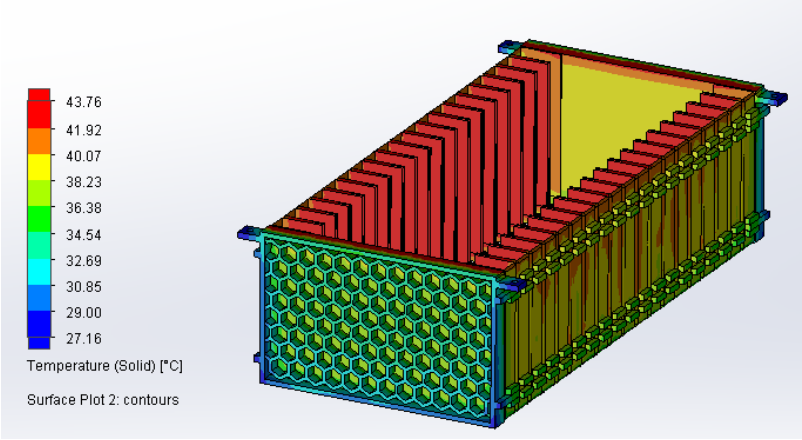

Thermoplastic solution is observed to perform similar compared to incumbent aluminum

THERMAL MANAGEMENT - CYLINDRICAL CELL HOLDER

Metallization provided at the interface between top & bottom holders and the cells for better thermal management

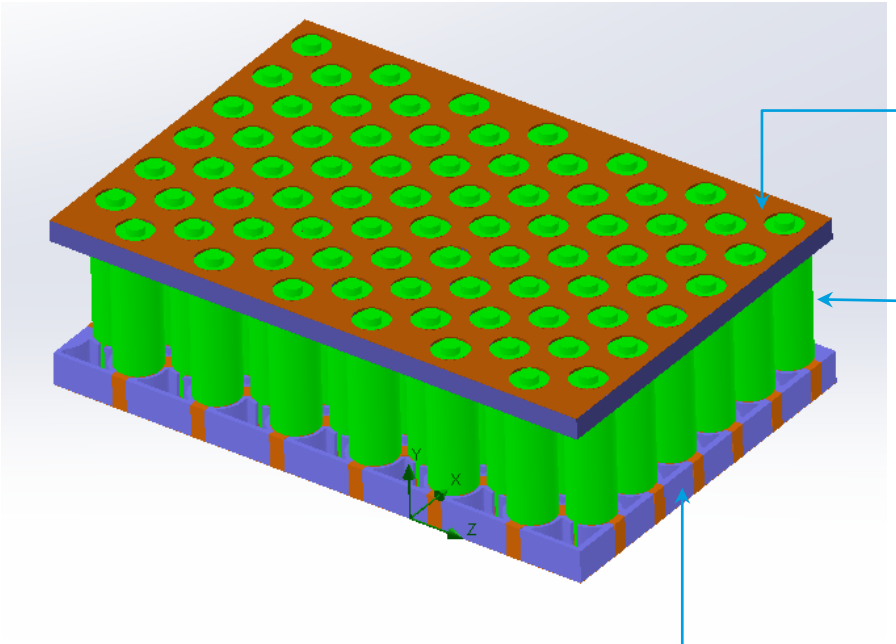

Module details with cell array

top holder

cells

bottom holder

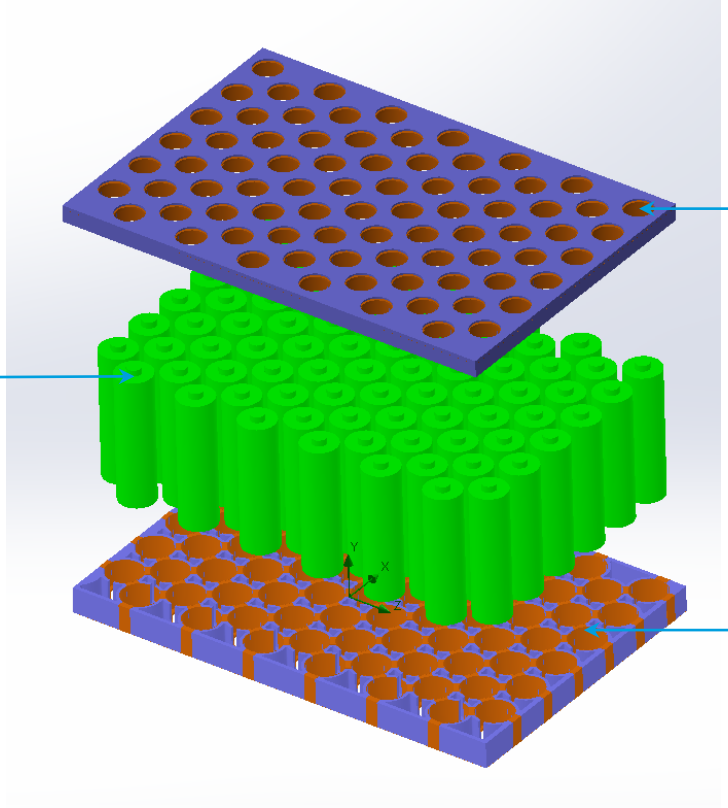

Exploded view of battery module

LDS conductive coating

TEMPERATURE CONTOUR OF BATTERY

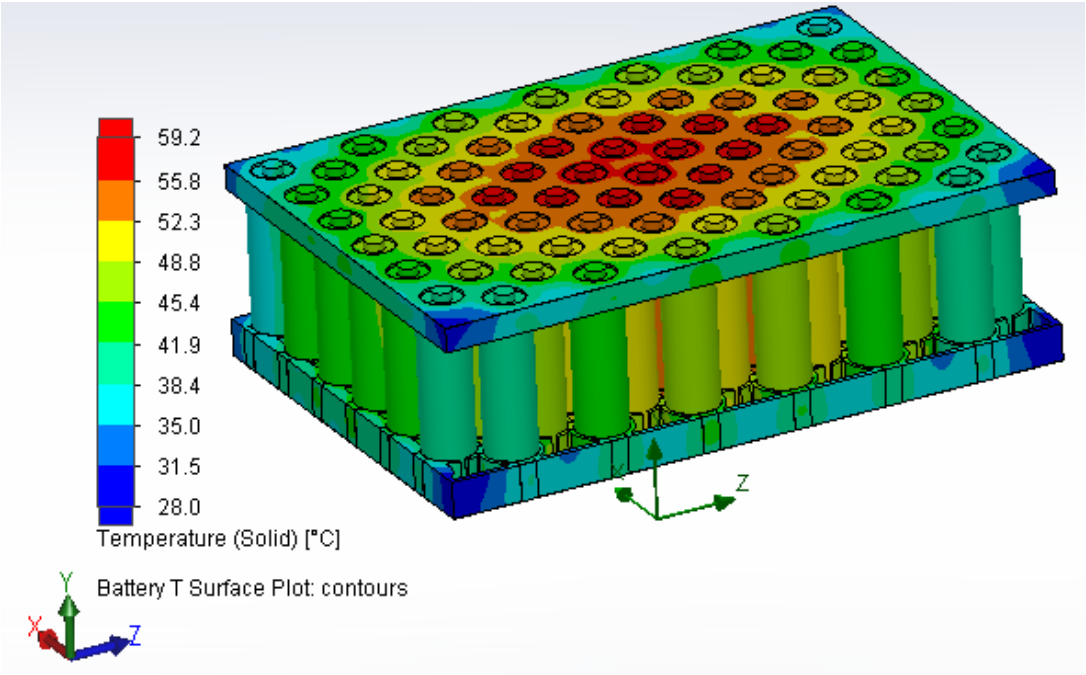

without LDS copper layer
T_{max} = 59.2 °C

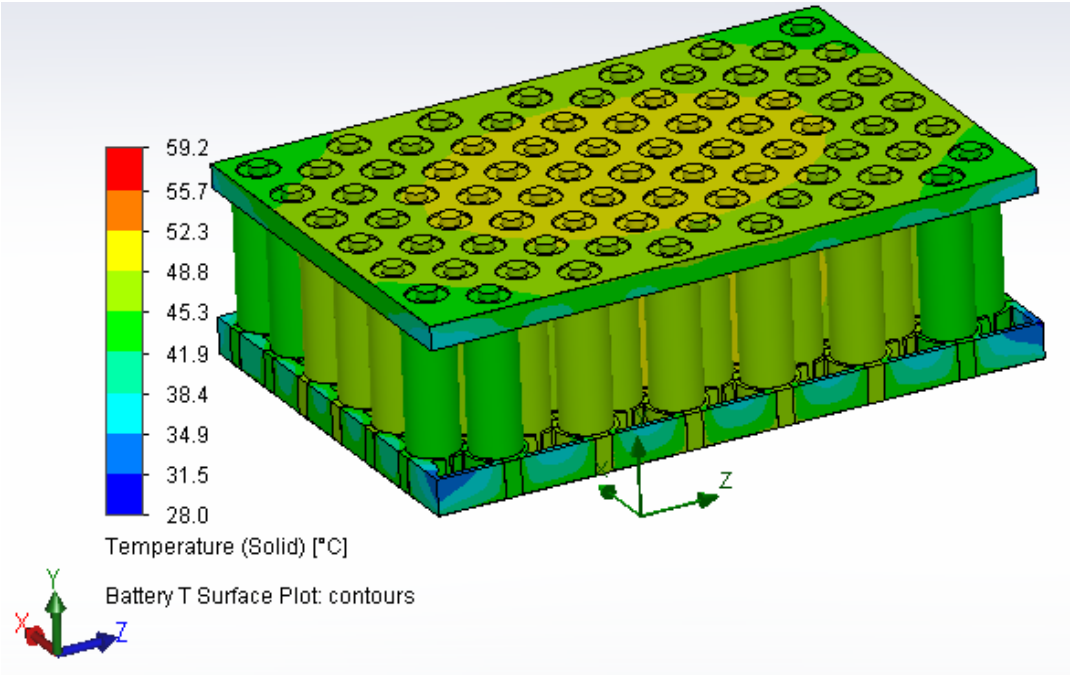

with LDS copper layer
T_{max} = 51.4 °C

LDS copper layer reduces the overall module temperature by 8 degrees

MANUFACTURABILITY – PROCESSING AND FILL PATTERNS

LARGE PARTS NEED BIGGER TOOLS AND FILL PATTERNS

- 33 hot drops were needed to fill 1600 X 800 mm part
- Need for high tonnage and bigger tool to handle in single piece

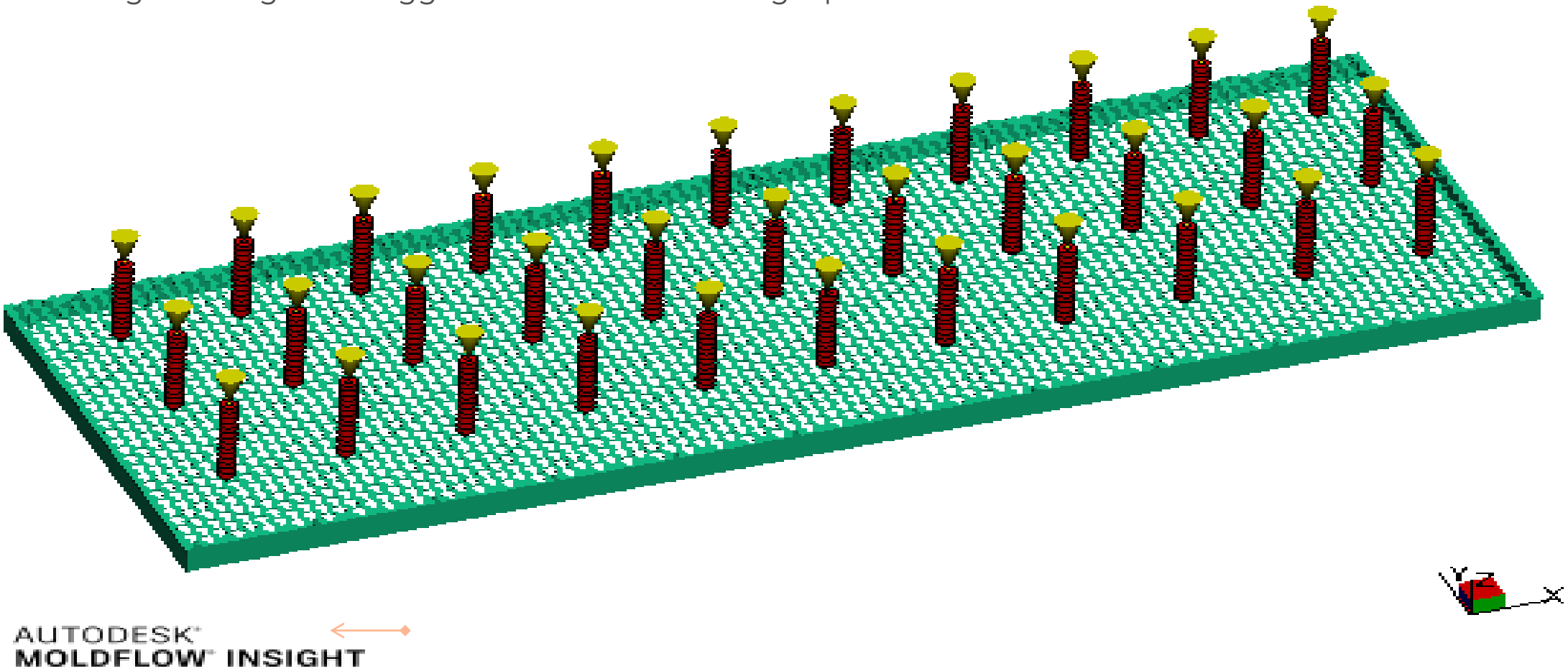

MODULAR CYLINDRICAL CELL HOLDER CONCEPT

Modular approach proposed for the cylindrical cell holder

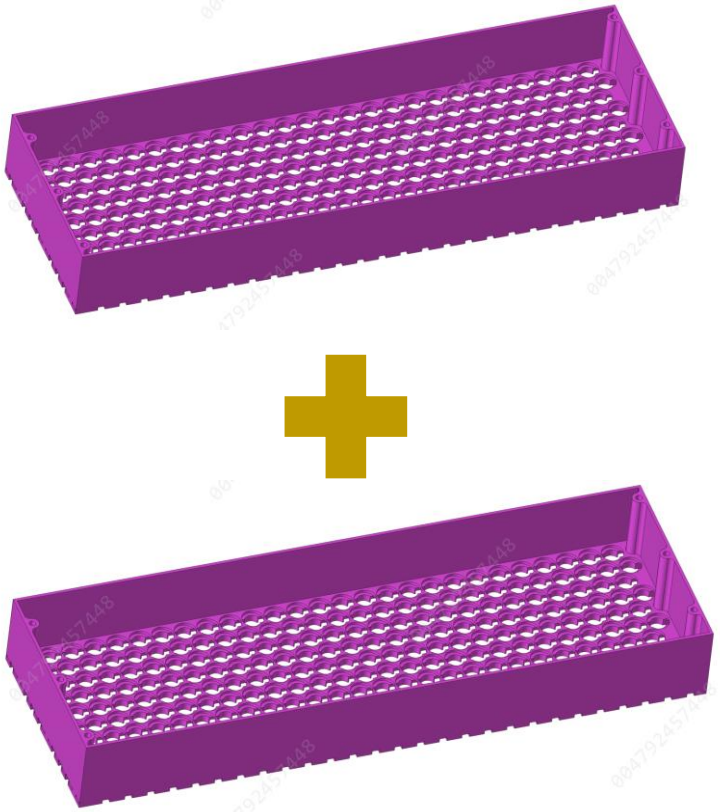

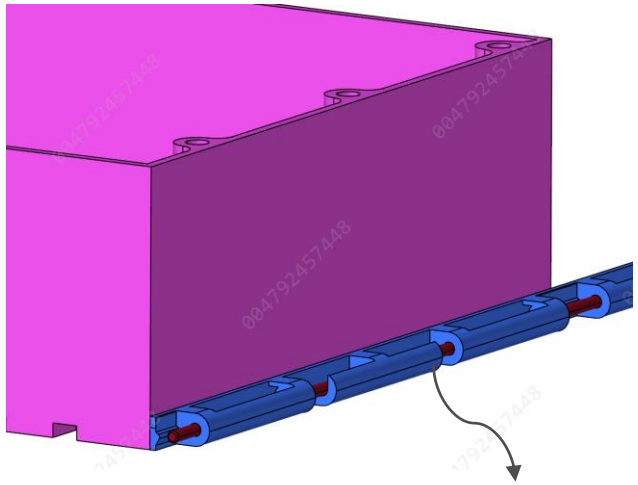

Modular cell holder connected through a metal rod

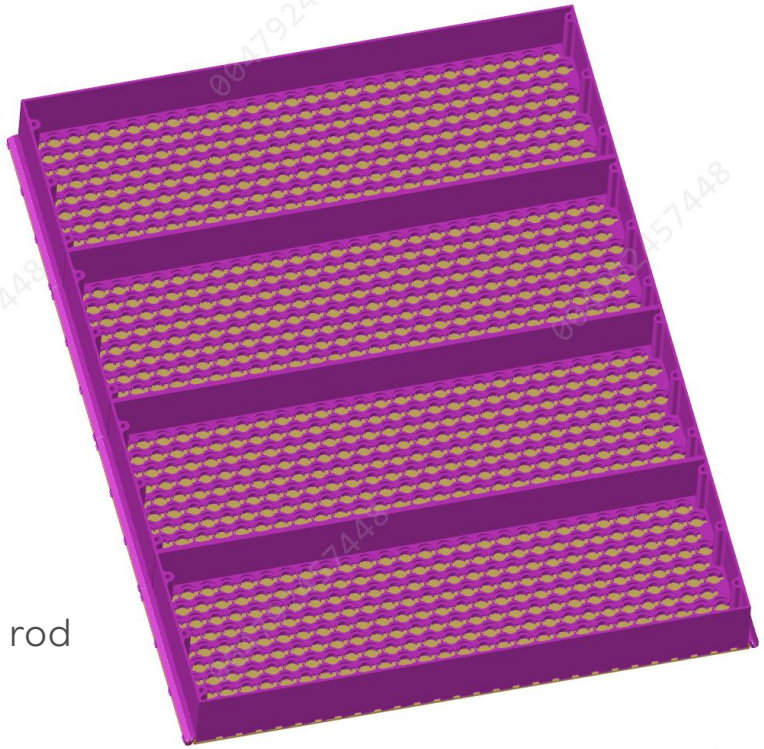

MANUFACTURING FEASIBILITY – CYLINDRICAL CELL HOLDER

- Complies with UL 94 V-0 standard down to 1.0 mm and UL 94 5VA standard at 3.0 mm
- Products that comply with UL F1 are available
- Excellent anti-draping properties
- Provides a non-brominated, non-chlorinated, non-phosphate, non-PTFE solution
- Improved flow and processability compared to standard clear FR polycarbonate
- CFR grades are transparent, CFR9111 (V0 @1.5 mm) Vs CFR9712 (V0@2 mm)

CFR9111 resin

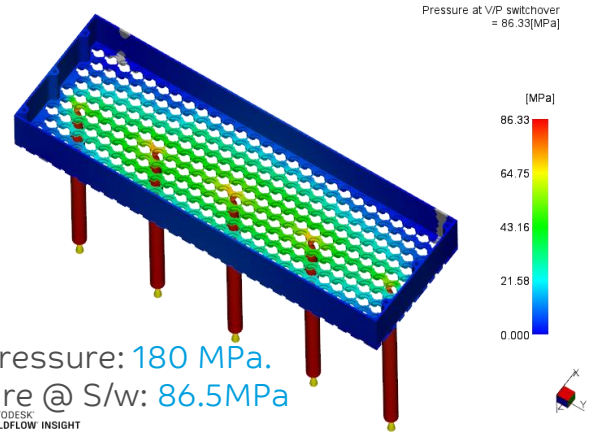

Max. Inj. pressure: 180 MPa.
Inj. Pressure @ S/w: 86.5MPa

CFR9712 resin

Max. Inj. pressure: 156 MPa.
Inj. Pressure @ S/w: 69.5MPa

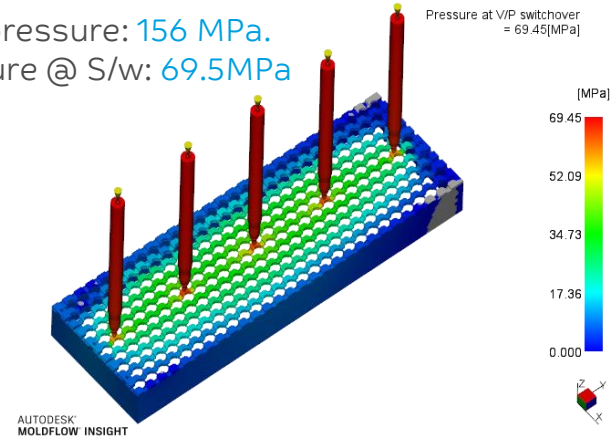

CELL HOLDER – MF STUDIES – RESULTS COMPARISON

CFR9111

Fill Time: 2.7sec.

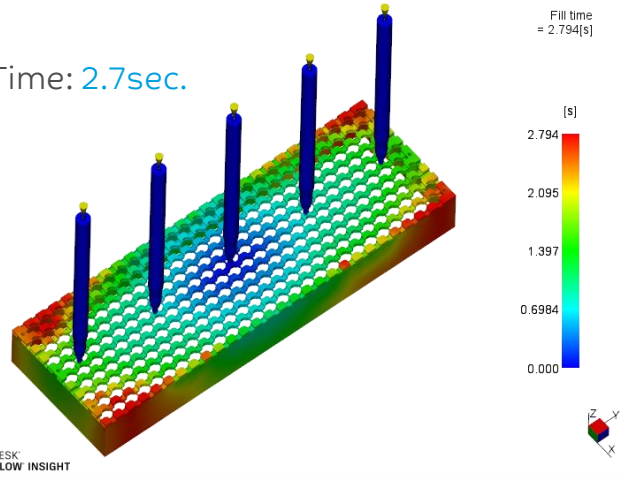

CFR9111

Max. Inj. pressure: 180 MPa.
Inj. Pressure @ S/w: 86.5MPa

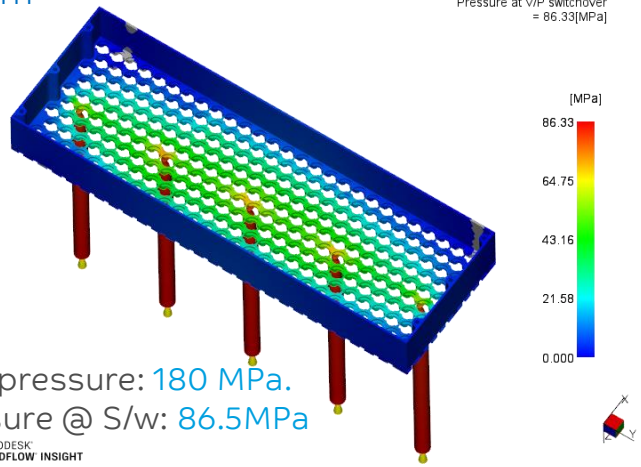

CFR9111

Overall part warpage:
~3.5mm

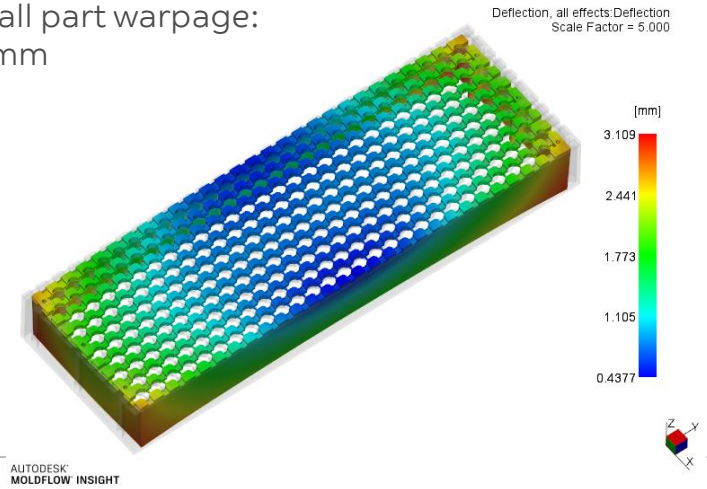

CFR9712

Fill Time: 2.7sec.

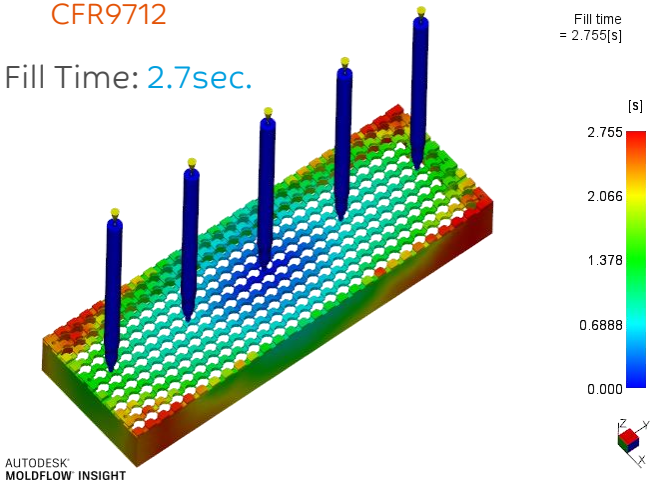

CFR9712

Max. Inj. pressure: 156 MPa.
Inj. Pressure @ S/w: 69.5MPa

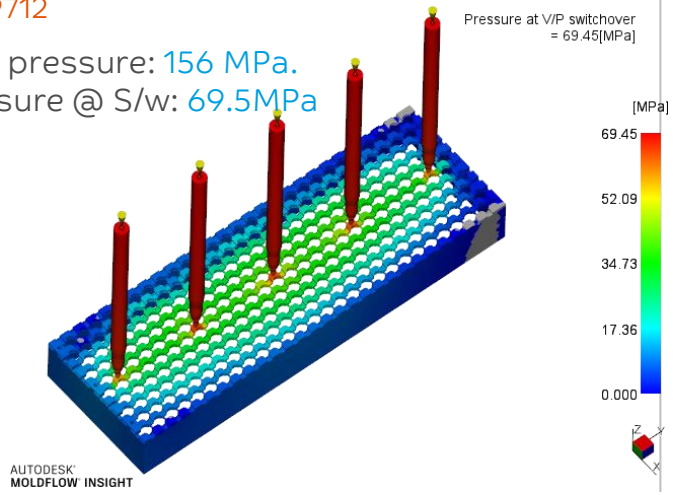

CFR9712

Overall part warpage:
~3.5mm

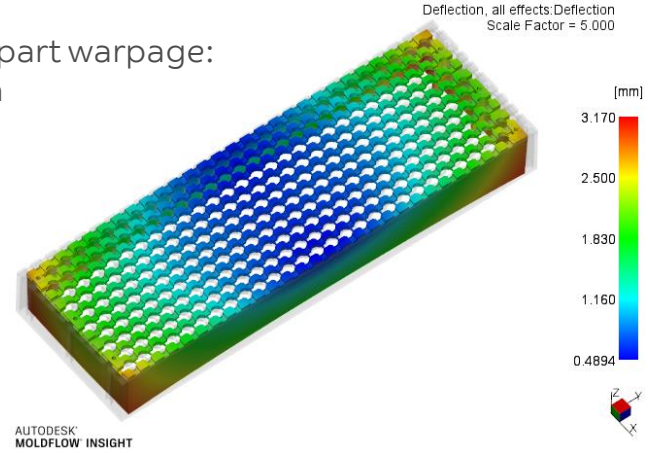

NEW INNOVATIONS

ADDITIONAL DESIGN OPTIONS

WIRELESS CONNECTIVITY

NORYL™ FILM FOR THERMOFORMABLE INSULATION LAYER

Robust FR and CTI-0 high tracking index performance helping prevent ignition and electric breakdown issues

- EV battery self ignition & electric breakdown issues are concerns for EV OEMs
- EV battery pack protection film can help decrease the failure risk

0.5MM NORYL FILM with V0 CTI-0

FR, UL94	V0 ≥ 0.5 mm
CTI	CTI-0
RTI	115 °C
Processability	Capable for film extrusion
	Easy thermal forming

WIRELESS CONNECTIVITY WITH LNP™ COMPOUNDS

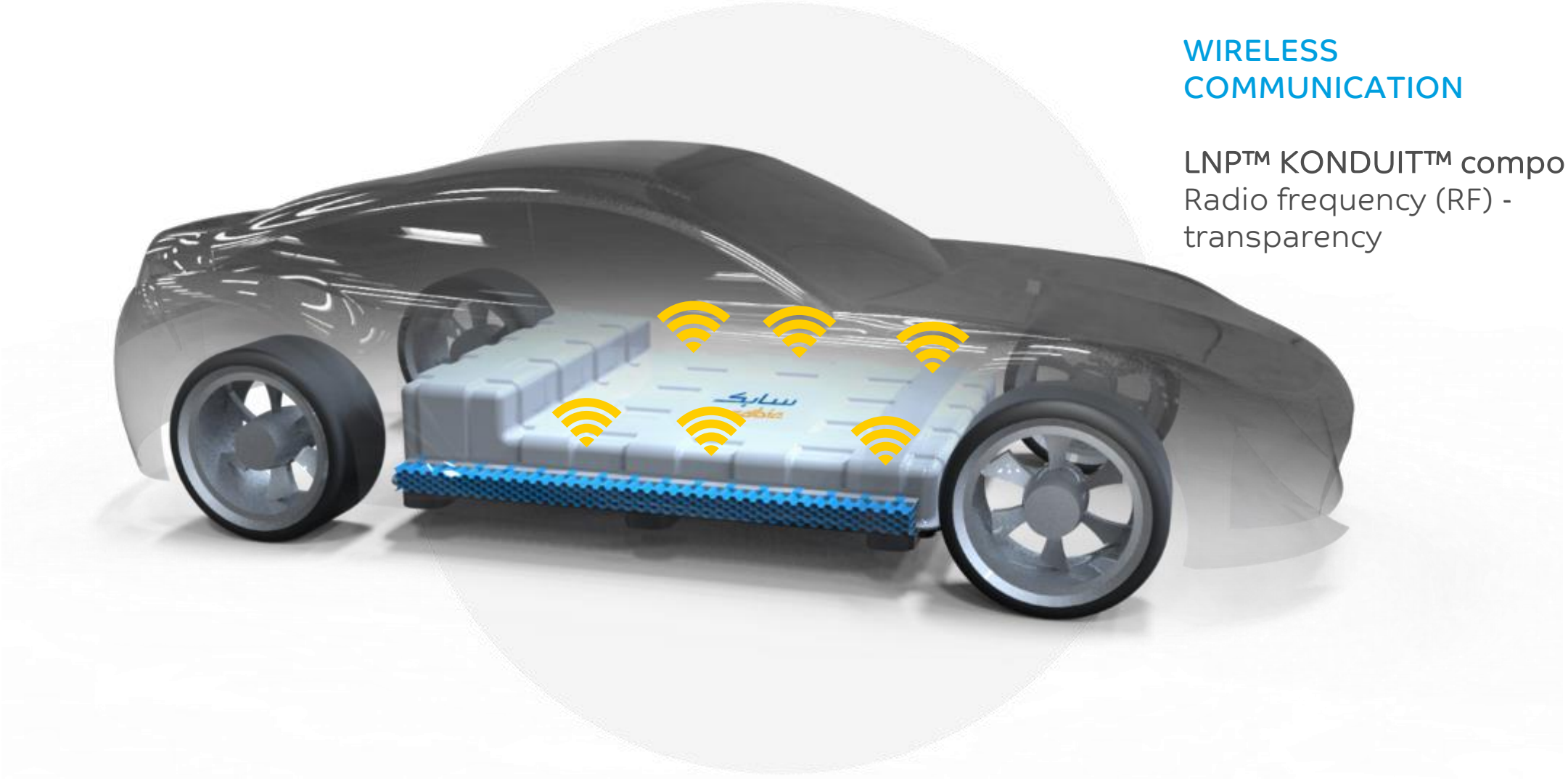

WIRELESS COMMUNICATION

LNP™ KONDUIT™ compound
Radio frequency (RF) - transparency

THANK YOU

Contacts

Somasekhar Bobba (Soma)
Global Technical Manager, Automotive
SABIC, 31220 Oak Creek Drive
Wixom, MI 48393, U.S.A.
Phone: (248) 697 4097
E-mail: Somasekhar.bobba1@sabic-hpp.com

DISCLAIMER

DISCLAIMER: THE MATERIALS, PRODUCTS AND SERVICES OF SAUDI BASIC INDUSTRIES CORPORATION (SABIC) OR ITS SUBSIDIARIES OR AFFILIATES ("SELLER") ARE SOLD SUBJECT TO SELLER'S STANDARD CONDITIONS OF SALE, WHICH ARE AVAILABLE UPON REQUEST. INFORMATION AND RECOMMENDATIONS CONTAINED IN THIS DOCUMENT ARE GIVEN IN GOOD FAITH. HOWEVER, SELLER MAKES NO EXPRESS OR IMPLIED REPRESENTATION, WARRANTY OR GUARANTEE (i) THAT ANY RESULTS DESCRIBED IN THIS DOCUMENT WILL BE OBTAINED UNDER END-USE CONDITIONS, OR (ii) AS TO THE EFFECTIVENESS OR SAFETY OF ANY DESIGN OR APPLICATION INCORPORATING SELLER'S MATERIALS, PRODUCTS, SERVICES OR RECOMMENDATIONS. UNLESS OTHERWISE PROVIDED IN SELLER'S STANDARD CONDITIONS OF SALE, SELLER SHALL NOT BE RESPONSIBLE FOR ANY LOSS RESULTING FROM ANY USE OF ITS MATERIALS, PRODUCTS, SERVICES OR RECOMMENDATIONS DESCRIBED IN THIS DOCUMENT. Each user is responsible for making its own determination as to the suitability of Seller's materials, products, services or recommendations for the user's particular use through appropriate end-use and other testing and analysis. Nothing in any document or oral statement shall be deemed to alter or waive any provision of Seller's Standard Conditions of Sale or this Disclaimer, unless it is specifically agreed to in a writing signed by Seller. Statements by Seller concerning a possible use of any material, product, service or design do not, are not intended to, and should not be construed to grant any license under any patent or other intellectual property right of Seller or as a recommendation for the use of any material, product, service or design in a manner that infringes any patent or other intellectual property right.