Composite battery housing based on (CF-)SMC/Prepreg technology

SPE ACCE 2021

Dr.-Ing. Timo Huber

November 2-4, 2021

ENGENUITY
Engineered by Innovation

HRC

ACTC Advanced Composite Technology Center

Agenda

- Introduction HRC Group & ACTC
- Composite battery housing based on (CF-)SMC/Prepreg technology
  - Project Motivation
  - Process Chain and Materials
  - Engineering and Simulation
- Summary & Outlook

HRC Group: Some facts

Founded in year **2014**…

1/3 R&D staff of total team…

Over **900** employees in **4** different countries…

Over **70** international and domestic clients…

NO. **1** market share for carbon fiber parts supply in China…

4 business units with different specialization and focus…

HRC Group: Some facts

After 7 years of rapid development, HRC has grown into a company group covering different segments for composite parts developing and manufacturing , facing the growing needs from various key target industries.

HRC

ACTC

R&D, process engineering & trial production

ENGENUITY
Engineered by Innovation

Composite design, engineering & material characterization

HRC
Mass Production Centers

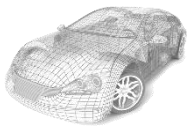

Automotive

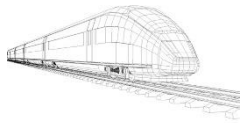

Aerospace and Railway

Global Distribution

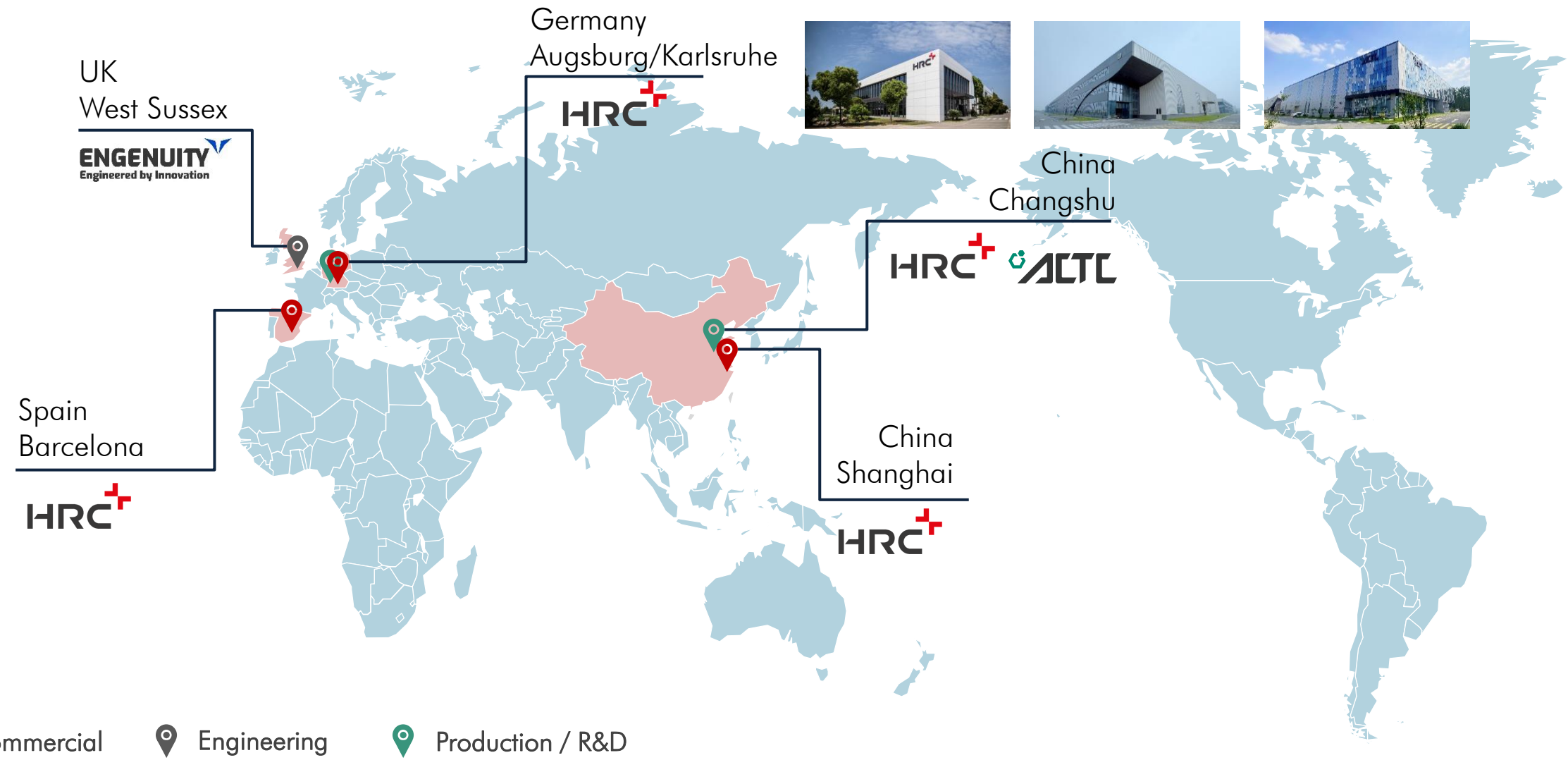

黄浦江路59号，常熟市国家高新技术产业开发区
No. 59, Huangpujiang Road, Changshu National New &High-tech Industrial Zone

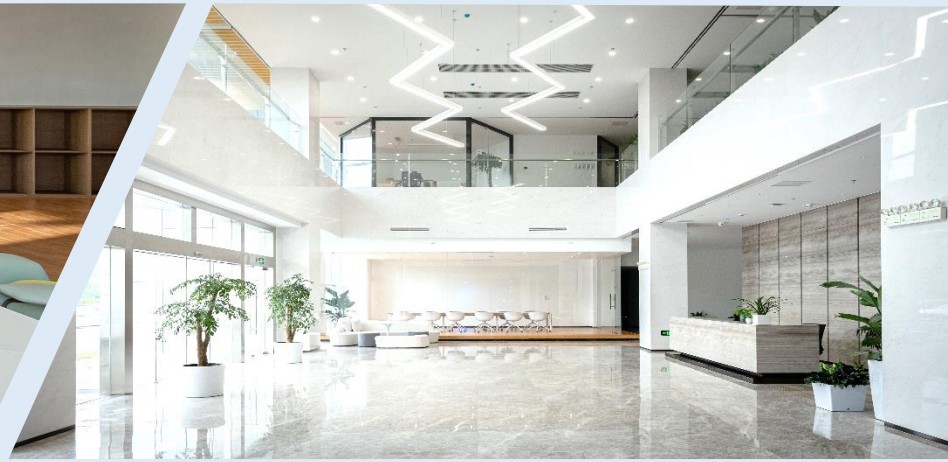

Fraunhofer ICT
德国弗劳恩霍夫化学技术研究院
Fraunhofer ICT

HRC
中国恒瑞有限公司
Hengrui Corporation

企业化管理运作的开放研发平台 - Open R&D Platform

8000平米
8000㎡

2000万欧元
20 million Euro

2019年底前
By Q4, 2019

Main Technologies

Source: ACTC

	Thermoset	Thermoplastic
Discontinuous Fiber	Compression molding SMC & C-SMC	Injection molding Compression molding
	Hybrid Solutions (Metal-Composite)	
Continuous Fiber	Resin Transfer Molding (HP-RTM) Wet Compression Molding (WCM) Prepreg Compression Molding (PCM) Pultrusion / Pulwinding Filament Winding (FW)	Automated Tape Laying UD / Organo Sheet Thermoforming Back Injection Molding Pultrusion

Source: Fraunhofer ICT

Source: ACTC

Source: KraussMaffei, HRC

Source: Fraunhofer ICT

Source: KraussMaffei

Full solution R&D platform

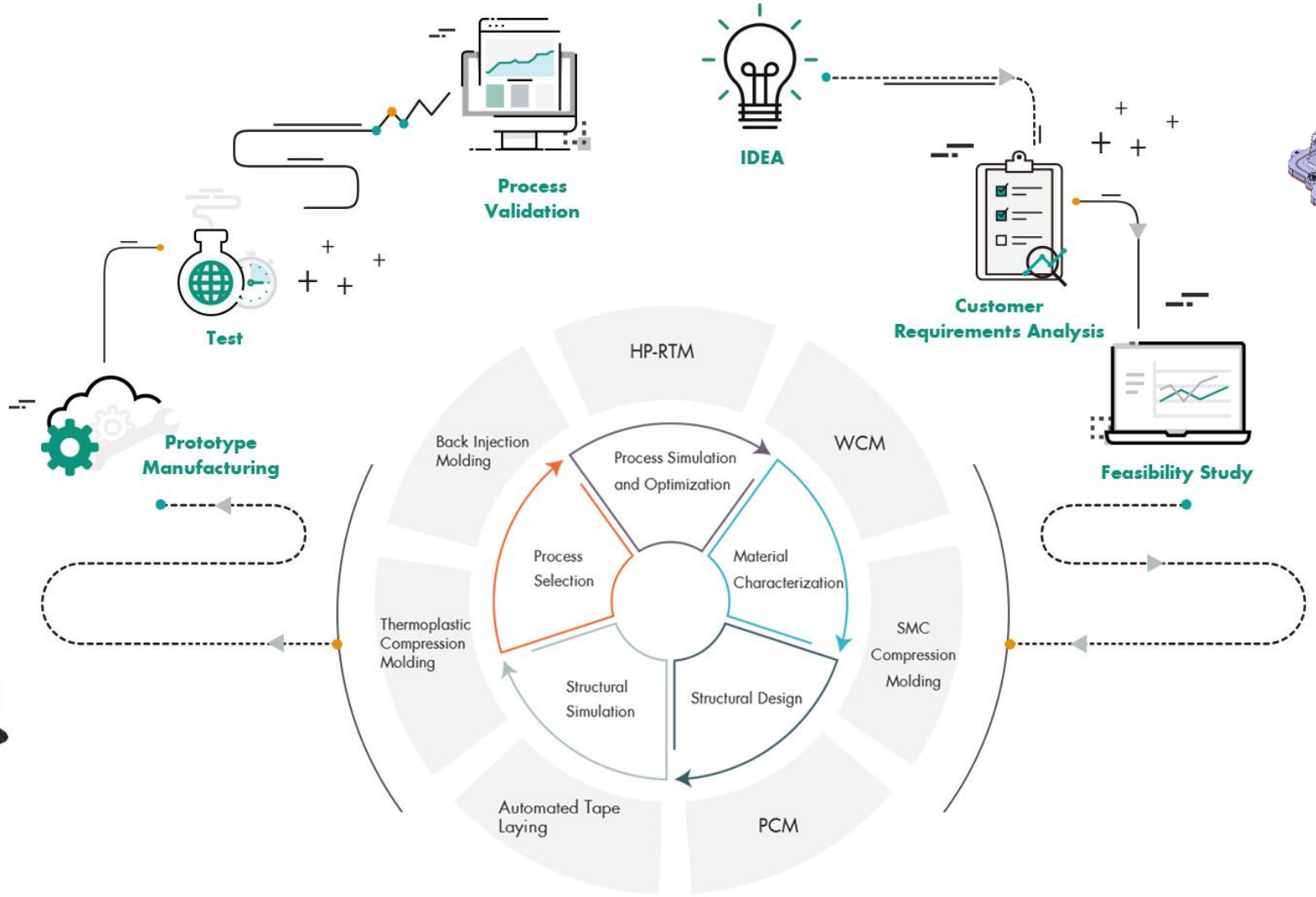

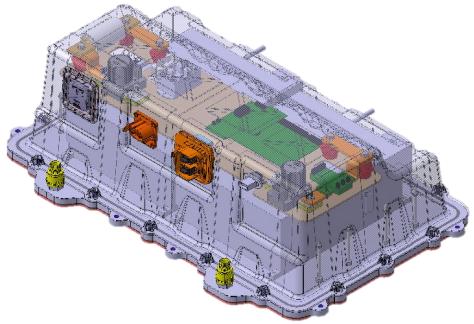

Composite battery housing based on (CF-)SMC/Prepreg technology

Project Motivation – EV Market Trends

- Development of sustainable & innovative lightweight traction battery system
- Growing market: announcements of German car manufacturers
  - BMW: 12 new battery electric models by the year 2025
  - Mercedes: All model series will be electrified until 2022
  - VW: 50 new battery electric vehicles and 30 new plug-in models until 2025
  - Porsche: In 2030, 50 % of all Porsche vehicles sold will be electrified
- Trend towards higher battery capacities

Source: Mercedes

Mercedes EQC: 80 kWh*

Source: Audi

Audi Q4 40 e-tron: 77 kWh*

Source: Tesla

Tesla Model S: 100 kWh

Source: Mercedes

Mercedes EQS: 108 kWh*

* Net capacity

Project Motivation – Safety Requirements

Safety aspects of EV car concepts

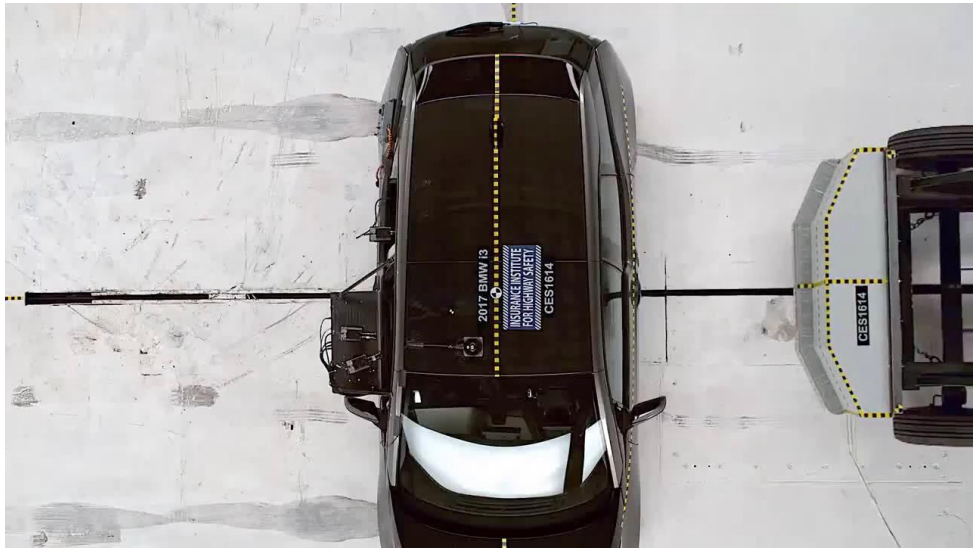

Source: IIHS

Source: NHTSA

Battery as part of the safety concept

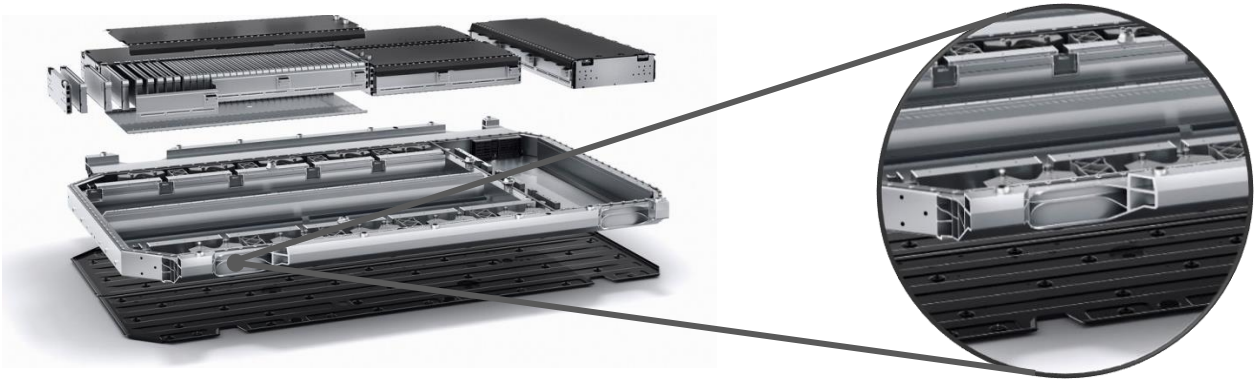

Source: Mercedes

Project Motivation

- Technical challenges of battery systems and housing solutions…
  - **Battery Safety**: in the case of crash and abuse including impact, fire protection,… (e.g. GB38031-2020 (China), UNECE R100 (Europe))
  - **Thermal Management**: fast-charging capability, sealing concept
  - **EMI Shielding**: need for protection against electromagnetic interference with other vehicle components and environment
  - **Lightweight**: high-performance lightweight structures allow a high weight-specific energy density
    - Tesla Model 3 (Long Range RWD): 75 kWh, 600 km (WLTP), 478 kg
    - VW ID.3 Pro Performance: 58 kWh, 426 km (WLTP), 495 kg
    - BMW iX3: 80 kWh, 460 km (WLTP), 518 kg (cover: SMC)
    - Mercedes EQC: 80 kWh, 462 km (NEFZ), 650 kg

- First step: development of lightweight battery housing as one part of an innovative battery concept (outlook)

SMC Battery Housing for BEV/HEV/PHEV

- Entire electrical energy storage system
  - Including battery modules, BMS and an integrated PDU (Power Distribution unit)
  - Battery modules are based on existing Samsung SDI Modules
- Designed to accommodate 2 different battery types
  - Either 4 battery modules e.g. used in the BMW i8 (left)
  - Or 2 battery modules e.g. used in the BMW i3 (right)

Source: Samsung SDI

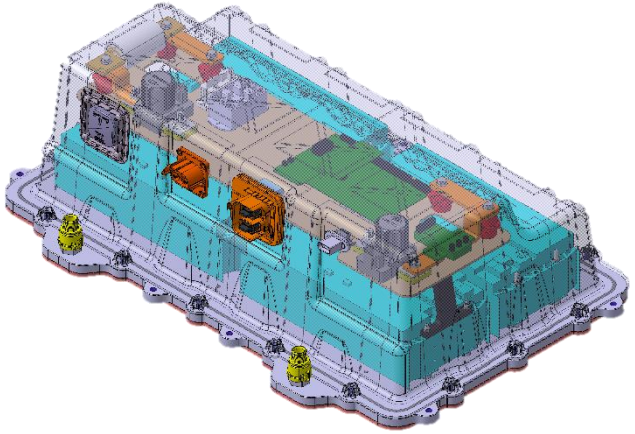

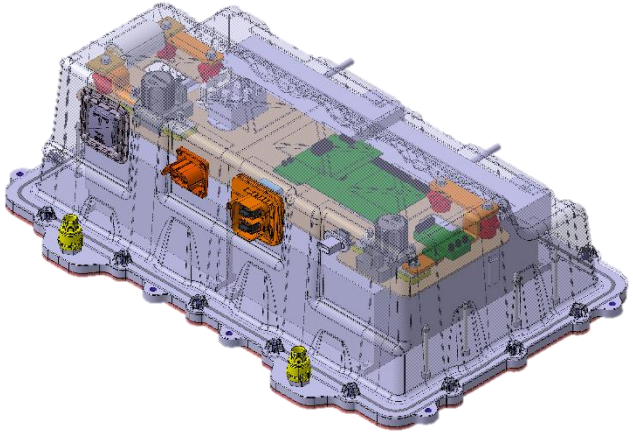

SMC Battery Housing for BEV/HEV/PHEV

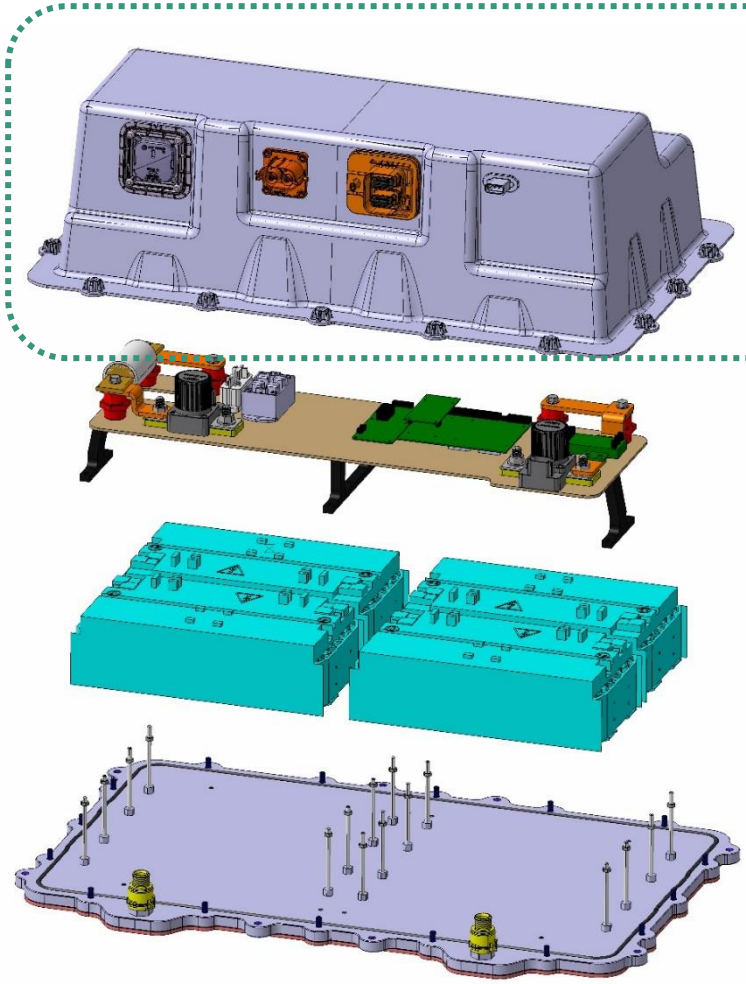

- Housing closure head & connectors
- Power distribution unit (PDU) / battery management system (BMS)
- Battery modules
- Base plate & cooling

SMC Battery Housing for BEV/HEV/PHEV

- FRP composites housing with integrated functionalities
  - Metal inserts for assembling housing & baseplate
  - Lightweight potential
  - 3D shape
  - High volume production process
- CF-SMC / GF-SMC with local reinforcements

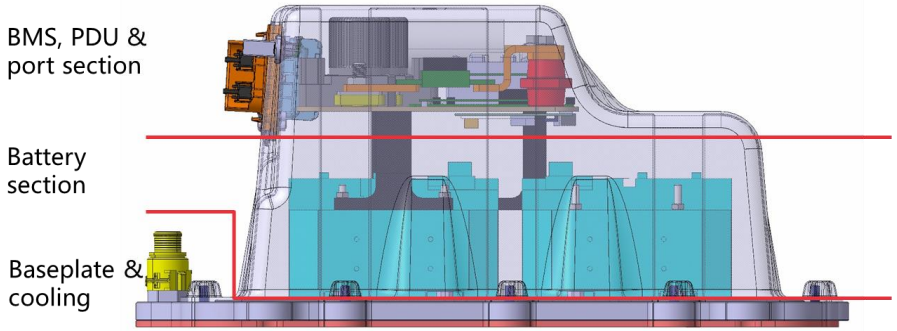

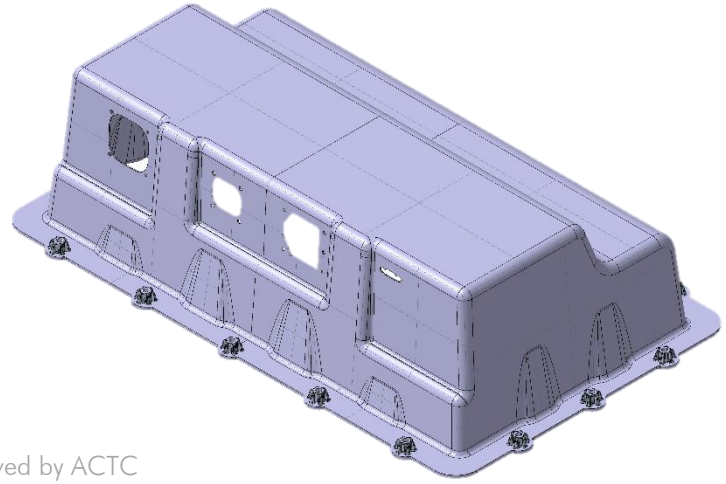

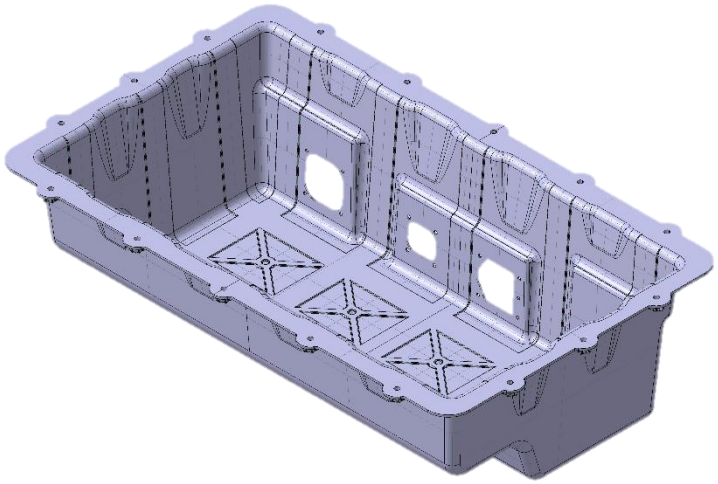

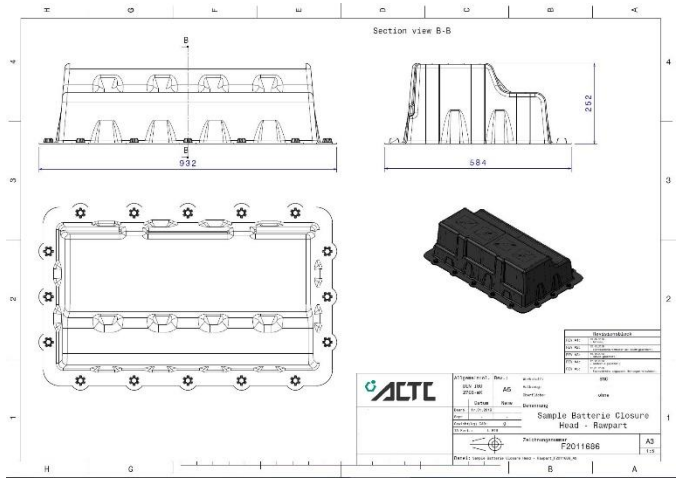

Sheet Molding Compound (SMC)

- SMC is a flat semi-finished product typically made of cross-linkable resins (UP, VE, EP, PU, hybrid), chopped reinforcement fibers (GF, CF, NF,…), mineral fillers and additives

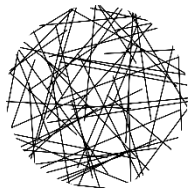

- Quasi-isotropic properties due to randomly distributed fibers
- The production of components made of SMC can be divided into three/five temporally and spatially separable processes:

Inhouse capabilities

Resin-filler mixture preparation

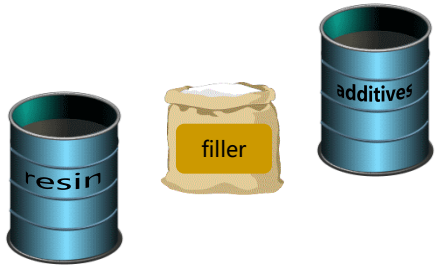

Manufacture of semi-finished products

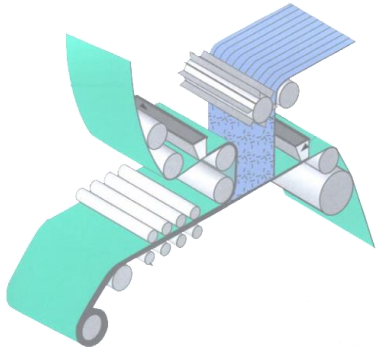

Maturation process

Transport if necessary

Molding of SMC part

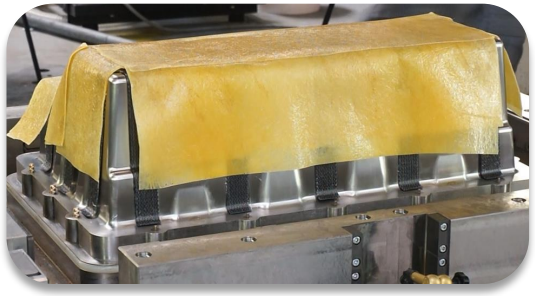

Materials

- Material combinations
  - GF SMC
  - GF SMC + CF UD Prepreg
  - CF SMC
  - CF SMC + CF UD Prepreg
  - Material partners:

AOC

GF SMC / CF SMC / CF UD Prepreg

MITSUBISHI CHEMICAL CARBON FIBER AND COMPOSITES
A Group Company of MITSUBISHI CHEMICAL

CF SMC

ZOLTEK
Toray Group

CF UD Prepreg

Manufacturing & Preforming of UD CF Prepregs

- ZOLTEK PX35 Stitch-Bonded Uni-Directional Carbon Fabrics
  - Produced from our ZOLTEK PX35 50K Continuous Tow Carbon Fiber
  - Fabric weight 300 g/m^2 / Fiber content: 60 wt.-%
- AOC Daron Non-Flow hybrid resin
  - Adjusted chemistry based on resin system used for SMC
  - Enabling robust preform inlays for co-molding process

Source: ZOLTEK

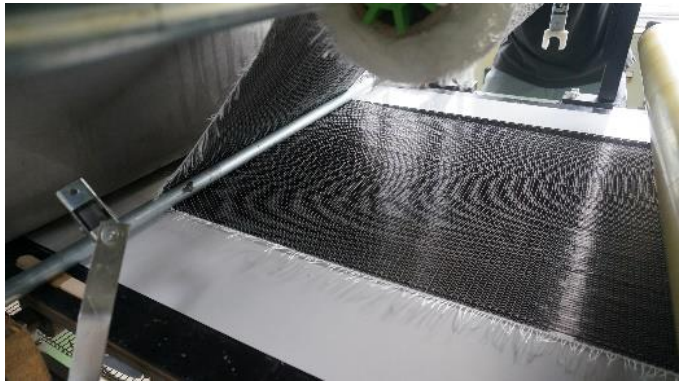

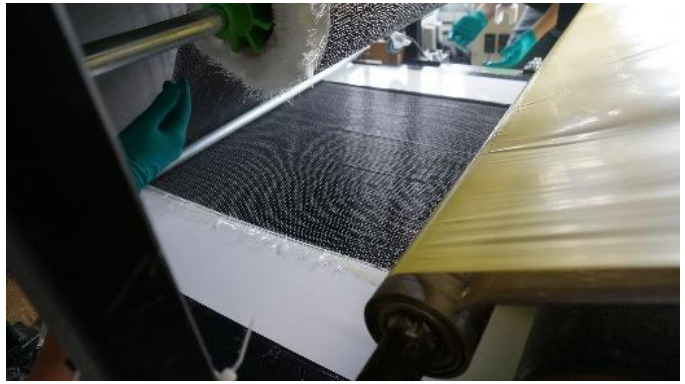

UD prepreg and preform part

Cutting and stacking of the preforms

Cutting	Automatic process on ZÜND cutting table
Stacking	Manual process

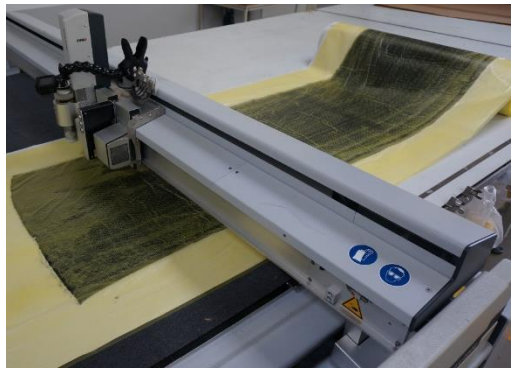


UD prepreg cutting and stacking

PCM preforming process

Curing time	12 min
Temperature	85 °C Upper tool 80 °C Lower tool
Inlay thickness	1 mm – 3 layers
Preform part weight	0.5 kg

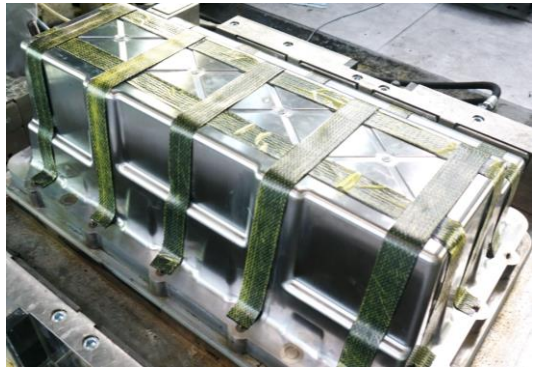
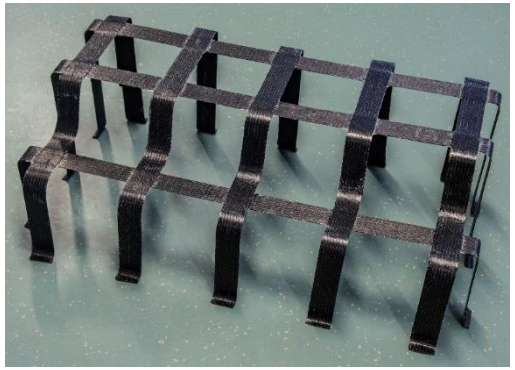

UD preform inlay – PCM process

Co-Molding Process SMC + Prepreg

- Specifications and benefits
  - Integration of continuous fibers into the SMC material
  - Advantage of continuous fibers → high strength and stiffness
  - Usage of continuous fibers only where it is necessary and beneficial
  - Advantage of SMC → complex part geometries, short cycle times, integration of inserts

CF reinforcement

SMC molding

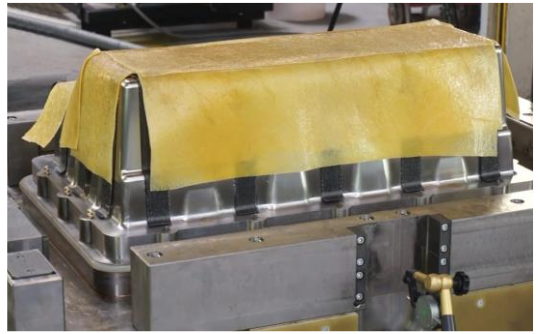

Tailored SMC part

Co-Molding Process SMC + Prepreg

SMC co-molding process	
Pressure	4,800 kN
Molding project area	0.55 m^2
Curing time	180 s
Mold Coverage	70-80 %
Temperature	150 °C Upper tool 145 °C Lower tool

SMC material	
GF-SMC material	AOC GF-SMC Fiber content 40 wt.-% Hybrid resin
CF-SMC material	Mitsubishi CF-SMC Fiber content 53 wt.-% Epoxy acrylate resin

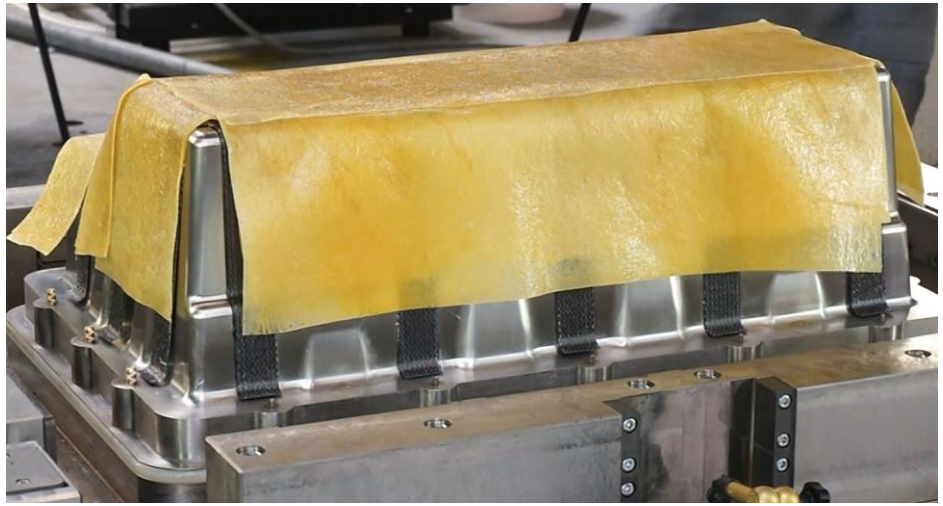

GF-SMC with UD prepreg co-molding

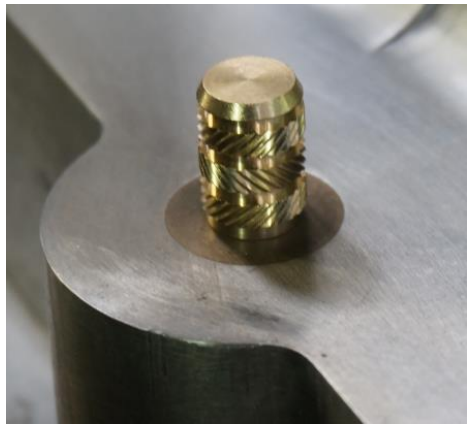

10 Metal knurled screw inserts

Co-Molding Process SMC + Prepreg

Materials Used	Estimated Part Mass* (including inserts for composites)	Mass Change	Estimated Stiffness*
Stamped Aluminum	6.50 kg	0 (baseline)	70 GPa
GF-SMC + UD/CF-prepreg	4.90 kg	25 ↓ %	GF-SMC: 11.5 GPa Prepreg: 120 GPa
CF-SMC + UD/CF-prepreg	3.90 kg	40% ↓	CF-SMC: 42 GPa Prepreg: 120 GPa

** Values estimated from CAE results for comparably performing and similar-looking designs.*

GF-SMC + UD prepreg

Pure CF-SMC

CF-SMC + UD prepreg

C-SMC Battery Box Co-Molding

Simulation approach for SMC process simulation

- SMC Battery Cover has a complex initial charge stacking to ensure complete filling
  - 6 rectangular sheets are assembled to a 2D initial charge
  - Assembled initial charge is manually preformed

Original preformed SMC initial charge stack

- Molding simulation follows a two-step procedure to account for the complex initial charge stacking:

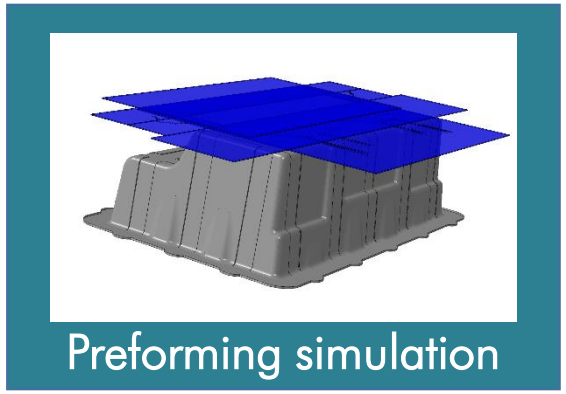

Initial charge

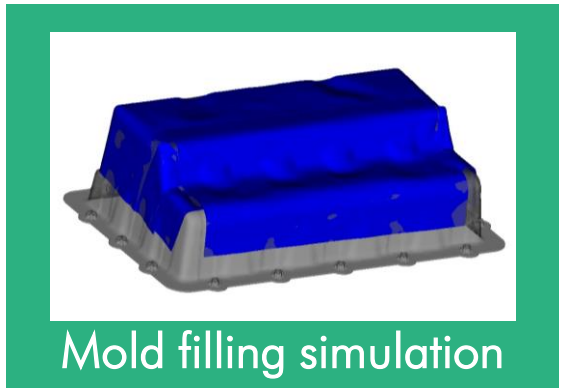

Preforming simulation

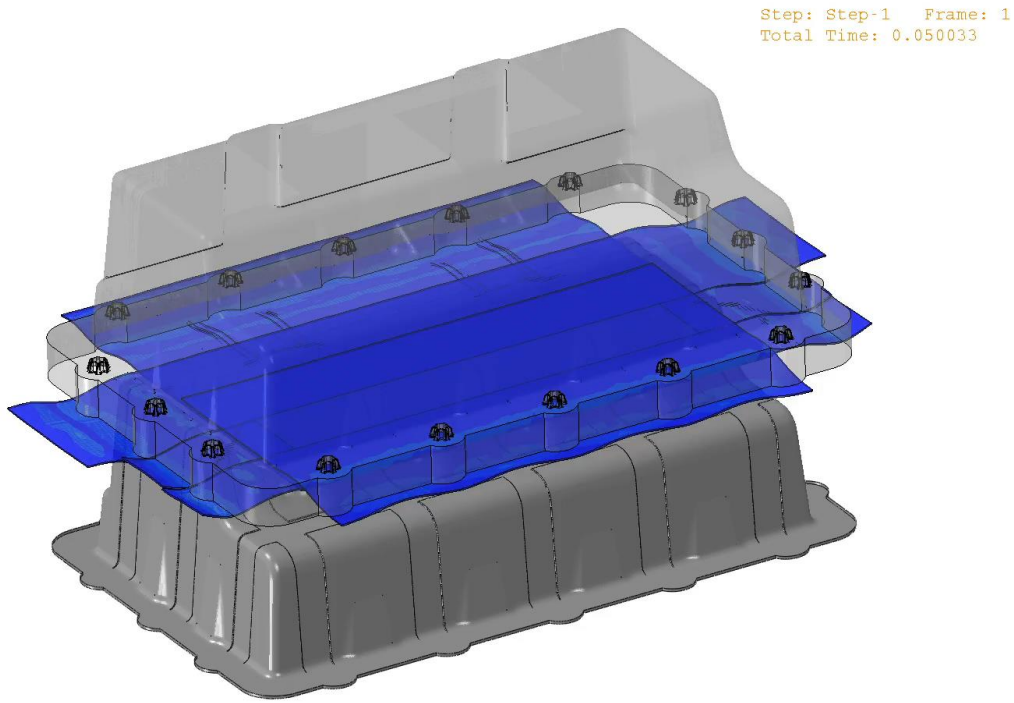

Preforming simulation of the initial charge stack

Advanced preforming simulation

- Usage of proprietary material and friction models from Simutence to predict preforming
- Preforming simulation result of the initial charge assembly shows good match with real configuration
- Preformed initial charge is transferred to mold filling simulation

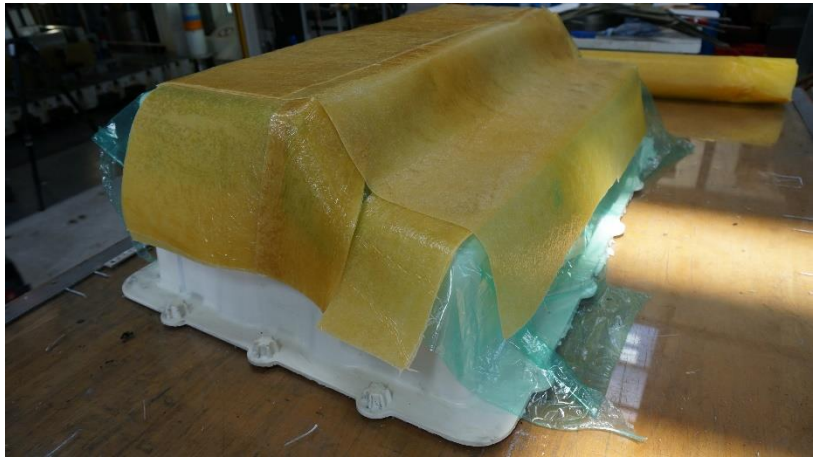

Original preformed SMC initial charge stack

SIMUTENCE
Virtual Composite Solutions

Mold filling simulation

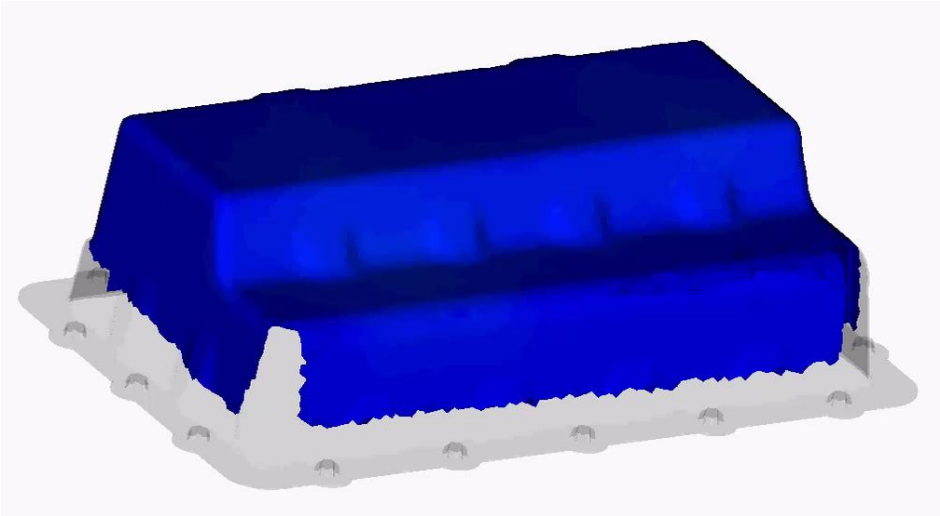

Mold filling simulation with transfer initial charge from preforming simulation

Advanced SMC modelling

- Usage of proprietary material modeling approaches
  - Anisotropic viscosity
  - Lubrication layer between SMC charge and tool
- Material card obtained from SMC-specific material characterization approaches

Process simulation outcome

- Complete mold filling of the cavity could be demonstrated
- Initial configuration can be used for robustness analysis
- Results (e.g., fiber orientation distribution) can be transferred to structural simulation

SIMUTENCE
Virtual Composite Solutions

Summary & Outlook

Summary & Outlook

- HRC is participating German research project “ProfilRegion”
- Development of a sustainable lightweight traction battery system
  - **Impact Protection** (protection of battery cells against physical damage)
  - **Sustainability** (Life Cycle Analysis; validation of recycling materials)
  - **Connection to Vehicle** (Integrated plugs for electrical, cooling, monitoring; quick change system)
  - **Cooling** (integrated in structure; optimized by CFD; suitable for fast charging)
  - **Sealing** (less sealing effort by less components; components with integrated 3D sealing function)
  - **Electro Magnetic Shielding**
  - **Flame protection**

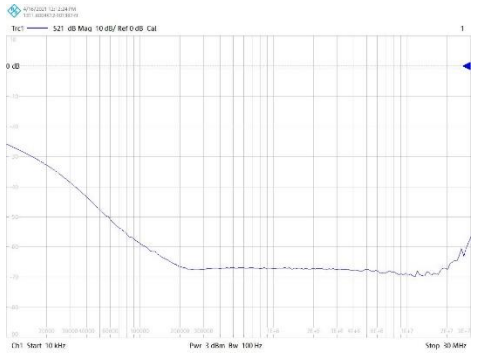

Summary & Outlook

System specification:

- Voltage: 800 V
- Capacity: 96 kWh
- Load-bearing packaging in the underbody
- Use of pouch cells

Target application:

- Commercial vehicles, e.g. vans, flatbed trucks, etc.

Summary & Outlook

Goal: Use of Innovative Lightweight Materials in the Appropriate Components - System Level

System frame:
- Aluminum extrusions

System floor:
- Sandwich construction: continuous fiber reinforced deck layers with foam core
- Manufactured using the Direct Sandwich Composite Molding process (D-SCM)
- Integrated cooling lines in the floor

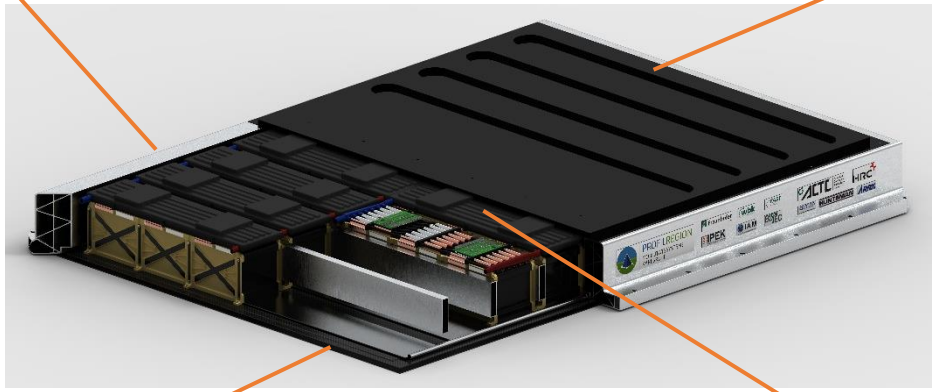

System cover:
- Sheet Molding Compound
- Flame retardant
- Local continuous fiber reinforcements

Module cover:
- Manufactured using the fiber injection molding process
- Locally adaptable material properties for targeted stiffness increases
- Integration EMI protection

Thanks to our partners

PROFILREGION MOBILITÄTSSYSTEME KARLSRUHE

KIT Karlsruher Institut für Technologie

Fraunhofer ICT

AOC

MITSUBISHI CHEMICAL CARBON FIBER AND COMPOSITES
A Group Company of MITSUBISHI CHEMICAL

ACTC Advanced Composite Technology Center

ALPEX Tooling for Composites

ENGENUITY Engineered by Innovation

HRC

SIMUTENCE Virtual Composite Solutions

HUFSCHMIED ZERSPANUNGSSYSTEME

roding

ZOLTEK Toray Group

ENGENUITY
Engineered by Innovation

HRC

ACTC Advanced Composite Technology Center

THANK YOU FOR YOUR KIND ATTENTION

Dr.-Ing. Timo Huber

Vice President ACTC
M: +49 160 4035190
E: timo.huber@actc.tech

Shanghai. Commercial
Add: 22D, Crystal Century Tower, No. 567 Weihai Road, Jingan District, China
Tel: +86 21 31013077

Changshu. Production / R&D
Add: No. 58 Huangshan Road, Changshu, China
Tel: +86 512 52888886

Barcelona. Commercial
Add: 1B-2, No. 48 Paseo de Gracia, 08007 Barcelona, Spain
Tel: +34 938328227

Augsburg. Commercial
Add: Melissenweg 8 86169 Augsburg, Germany
Mobile: +491759092434

West Sussex. Engineering
Add: Unit 7, Paynes Place Farm, Cuckfield Road, Burgess Hill, United Kingdom
Mobile: +44 1444457257

www.grouphrc.com