Does a Fiber Reinforced Thermoplastic Door Structure Meet the Energy Absorption Requirements for a Side Impact Crash Test?

Clemson University | *Srikanth Pilla, Veera Aditya Yerra, Sai Aditya Pradeep, Gang Li, Anmol Kothari, Madhura Limaye, Gaurav Dalal*

University of Delaware | *Shridhar Yarlagadda, Lukas Fuessel, Bazle Z. Haque*

Honda R&D Americas, Inc | *Skye Malcolm, Duane Detwiler*

Contents

Motivation

- CAFE 2025 – Fuel economy targets
- CO_2 Emissions 2007/46/EC – CO2 emissions targets
- End-of life vehicle directive 2000/53/EC – 95% reuse and recovery from 1st January 2015
- “Highest mass contribution is from the load bearing structure” (15% to 30%)

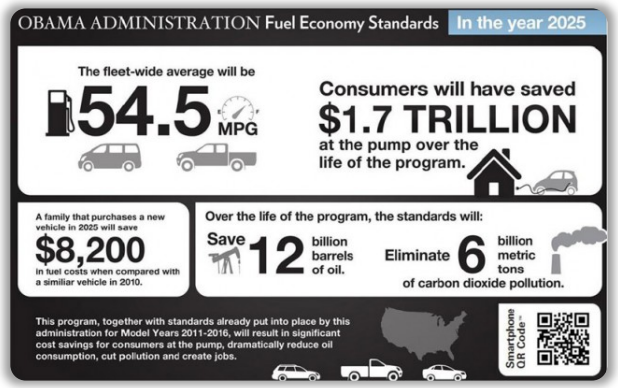

Fuel Economy Regulation vs Market Trend

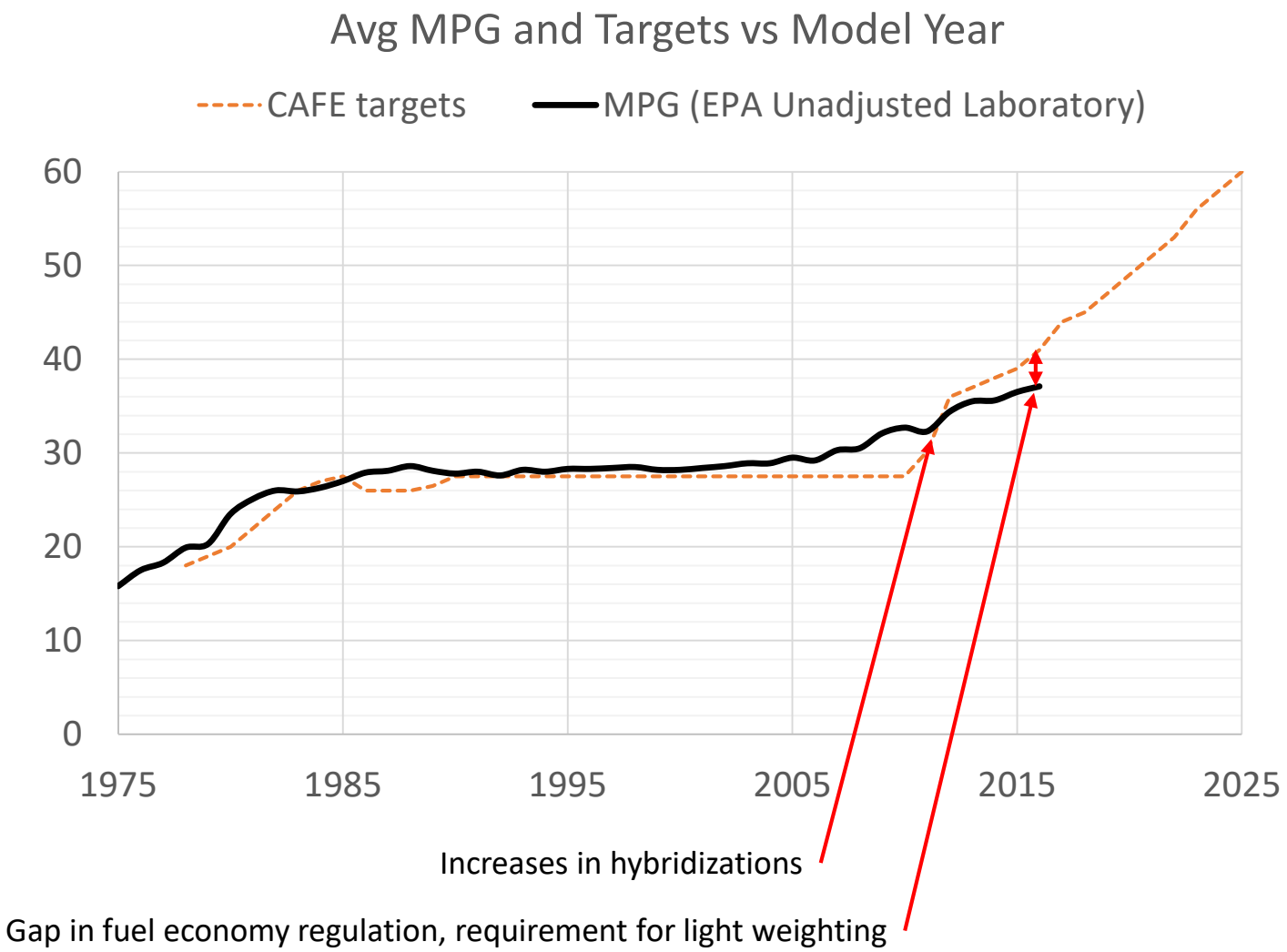

Light-Duty Automotive Technology, Carbon Dioxide Emissions, and Fuel Economy Trends: 1975 Through 2016, EPA

Technology Portfolio for Efficiency

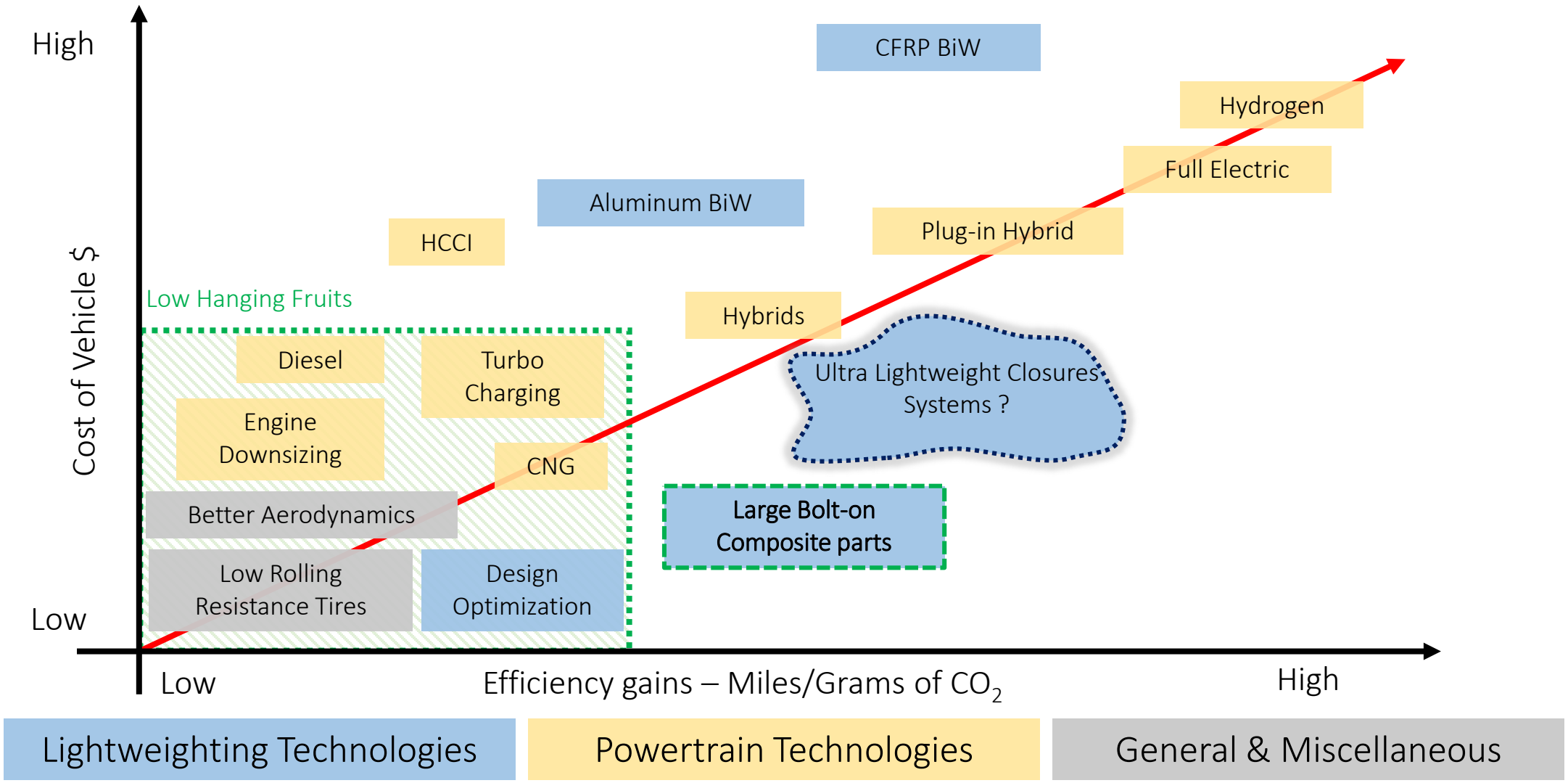

Grand Challenge

1. Achieve a 42.5% weight reduction (addresses goals in the DOE-VT MYPP)
   - Base weight = 31.8 kg
   - Target Weight = 18.28 kg

2. Zero compromise on performance targets
   - Similar crash performance
   - Similar durability and everyday use/misuse performance
   - Similar NVH performance

3. Maximum cost induced is 5$ per pound. (.453 kg)
   - Allowable cost increase = [(31.8-18.28)/.453]*5 = $ 150.1 per door

4. Scalability
   - Annual production of 20,000 vehicles

5. Recyclability
   - European standards require at least 95 % recyclability
   - Project goal is 100% recyclable (self imposed)

Fine Prints of the Grand Challenge

- Weight and cost target is for entire door assembly.
  - Not all components in the door assembly have equal lightweight potential
    - This drives a more aggressive target for the door frame.

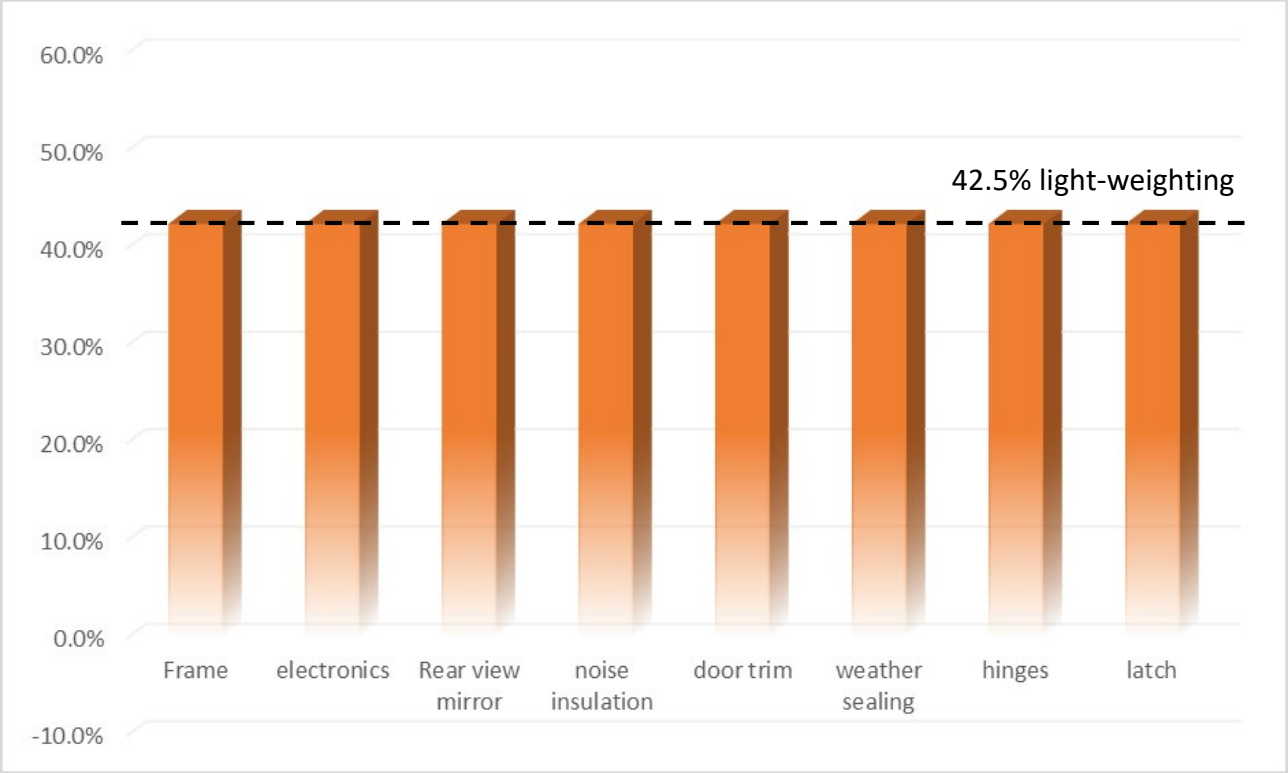

"Material substitution is not a solution"

Why Systems Approach?

Understating requirement at system level and decomposing targets and definition to lower systems.

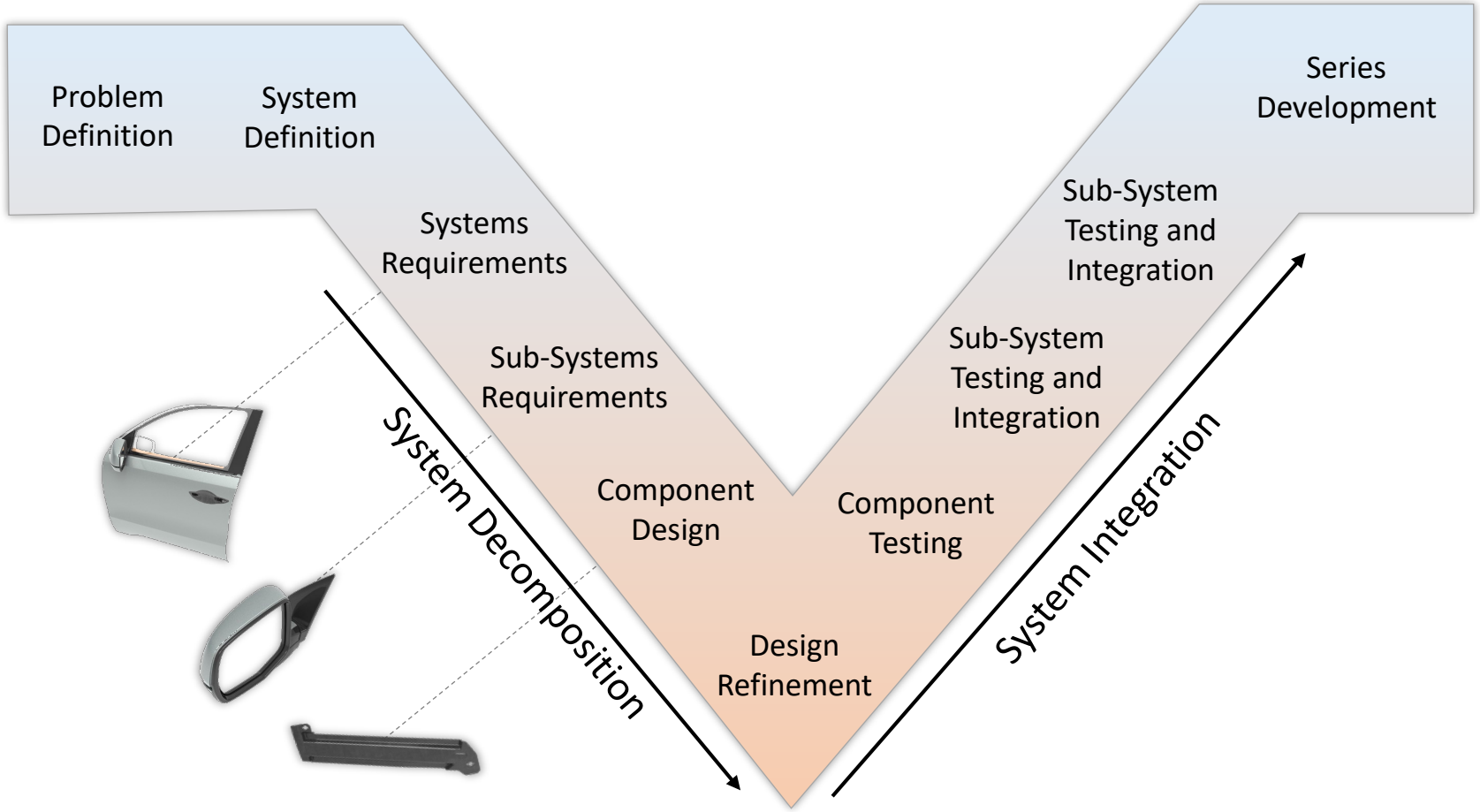

Project Constraints

Constraint set forth by DOE

- Need to use commercial available material systems
- The prototype door has to meet all attributes of the baseline door
- Technology for scalability has to ready available

Constraint set forth by Honda

- Should use same sealing geometry
- Should have all the equipment as the baseline door
- Should have un-noticeable difference in Class A finish
- Should meet all durability and aging requirements from Honda

Constraint set forth by the team (internal)

- Should be 100% recyclable/reprocessable

Target Definition: Big Picture

Benchmarking other lightweight door concepts and understanding performance vs cost tradeoffs.

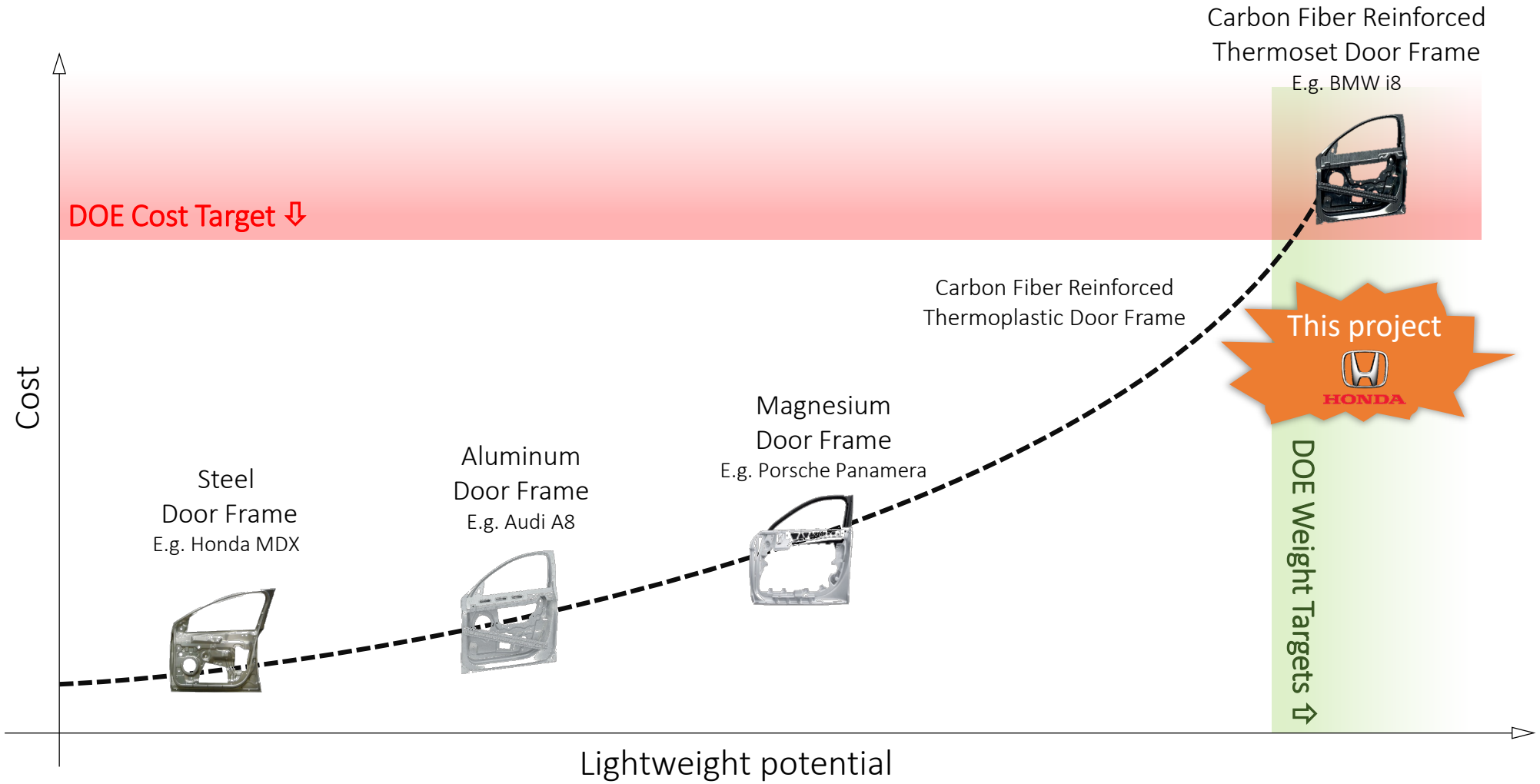

Project Timeline

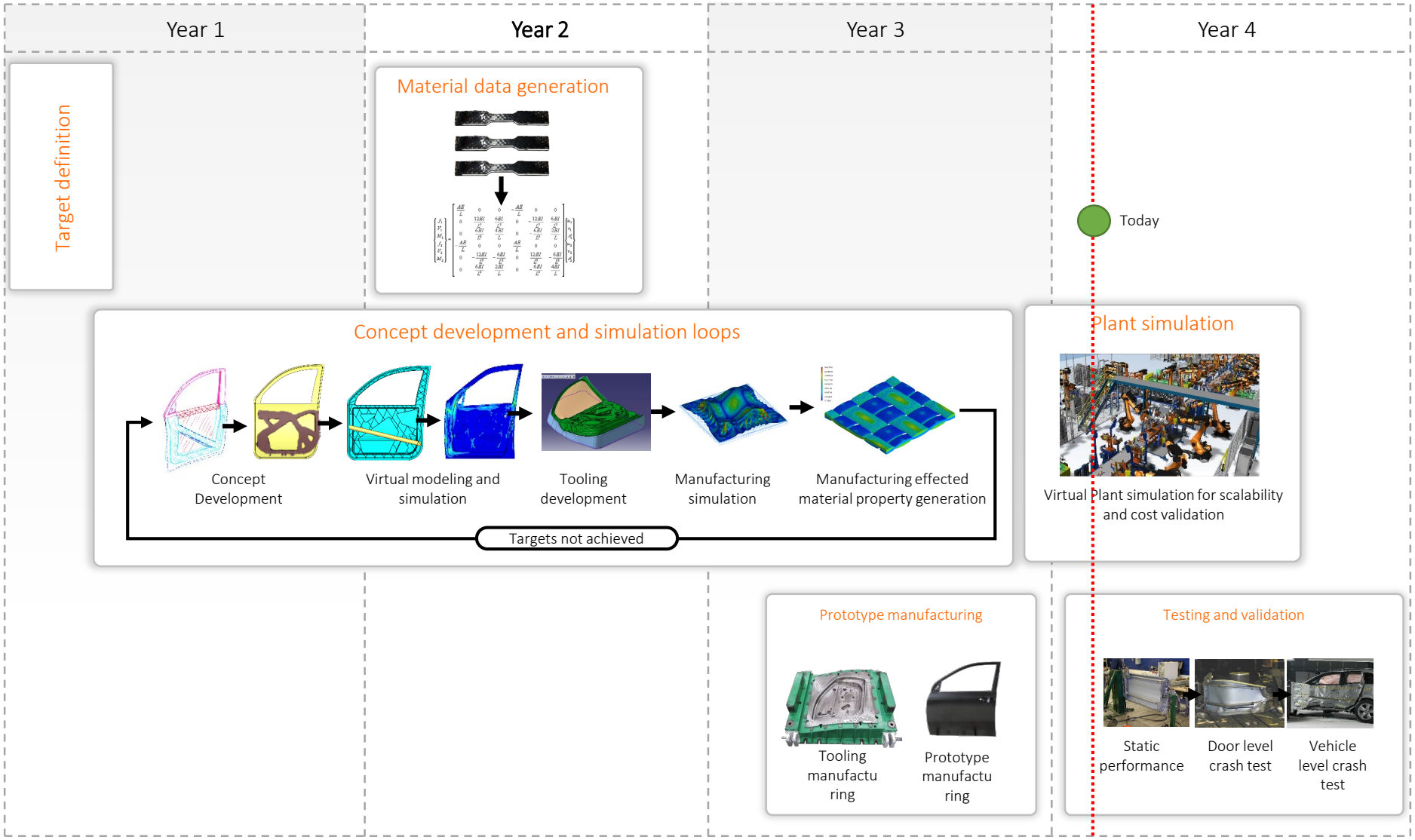

Material Data Generation

- Material selection
- Manufacturing process selection
- Material card generation

Baseline Benchmarking

Mass distribution in the baseline door

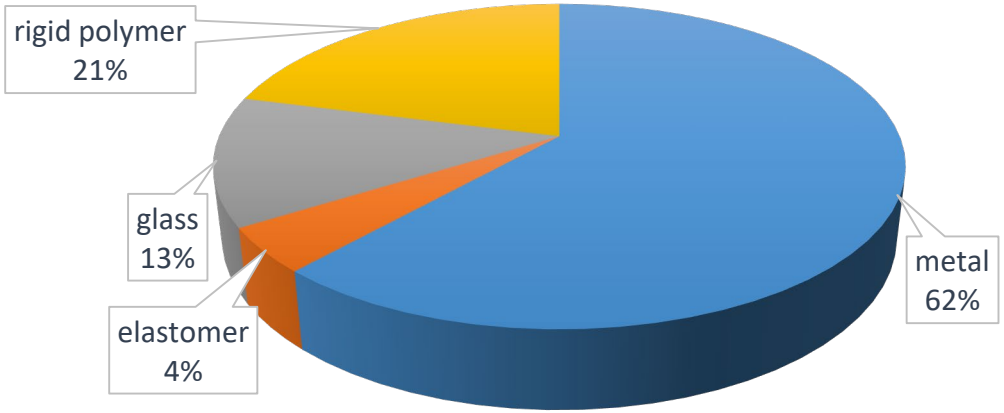

Frame 60% Reduction

Current weight : 15.45 kg
Target weight : 6.18 kg

Electronic 0% Reduction

Current weight : 3.0 kg
Target weight : 3.0 kg

Window 20% Reduction

Current weight : 3.70 kg
Target weight : 2.77 kg

Trim 30% Reduction Or elimination

Current weight : 3.24 kg
Target weight : 2.26kg

Material Data Generation

Why thermoplastic reinforced carbon fiber?

- +60% light-weighting target structural members
- +80,000 doors annually
- 100% recyclable

	Steel	Aluminum	Thermoset Composites	Thermoplastic Composites
Light Weight Potential	Medium	High	Very High	Very High
Material Cost	Moderate	Medium	High	High
Reprocessing/ Recyclability	Good	Good	Not	Good
Part Manufacturing	Very Fast	Very Fast	Slow	Fast
Joining Speed	Fast	Moderate	Very Slow	Very Slow
Average Takt Time Per Vehicle	55-100 sec	120-200 sec	480 sec	Tbd

Material data generation

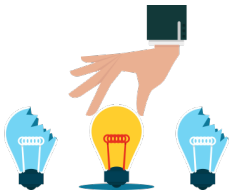

Material scouting

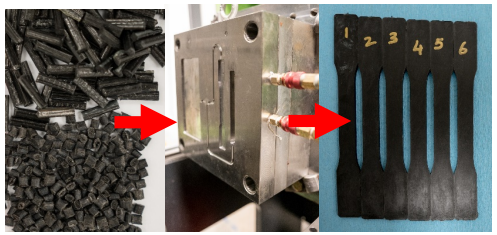

Sample manufacturing at similar conditions similar to mass production

Standardized testing

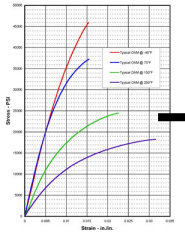

Archiving raw material data

1	2	3	4	5	6	7	8	9	10
MAT8	MID	E1	E2	NU12	G12	G1Z	G2Z	RHO	
	A1	A2	TREF	Xt	Xc	Yt	Yc	S	
	GE	F12	STRN	CS	EC	GC	ALPHA8	SB	
	EF1	NUF12	MSMF	PNPT	PNPC		FT	NB	
	E3	NU23	NU31	E1RSF	E2RSF	G12RSF	G12RSF	G2ZRSF	
				TE1RSF	TE2RSF	TG12RSF	TG12RSF	TG2ZRSF	

1	2	3	4	5	6	7	8	9	10
NLPARM	ID	NINC	DT	KMETHOD	KSTEP	MAXITER	CONV	INTOUT	
	EPSU	EPSP	EPSW	MAXDIV	MAXUBIS	MAXLS	FSTRESS	LSTOL	
	MAXBIS	TDG	TDC	TDV	MAXR		RTOLB		
	INITINC	MININC	MAXINC	TTOTAL					

PCOMP	190	-0.256	5.67	2500.0	HILL	70.0		
	200	0.065	0.0	YES	210	0.04	45.0	
	220	0.03	60.0					

Translating into appropriate material cards for FEA

Material Systems Overview

Strength/Stiffness and Cost

ScF Foamed Polymer	Pure Polymer	Short Fiber Reinforced Polymer	Woven Fiber Reinforced Polymer	Endless Fiber Reinforced Polymer
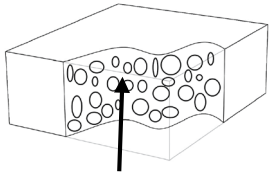 Micro cells (Gas Bubbles)	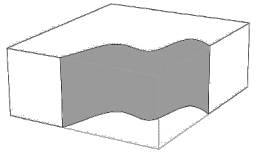	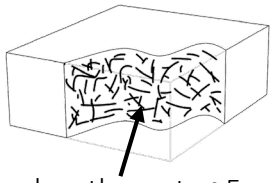 Fiber lengths up to ~5 mm	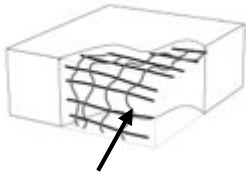 Woven fiber	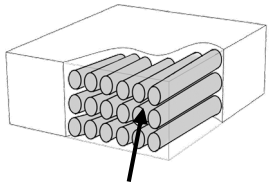 Continuous fiber
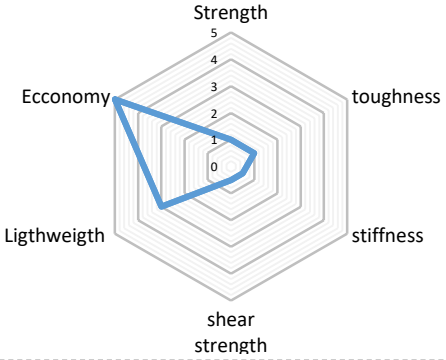	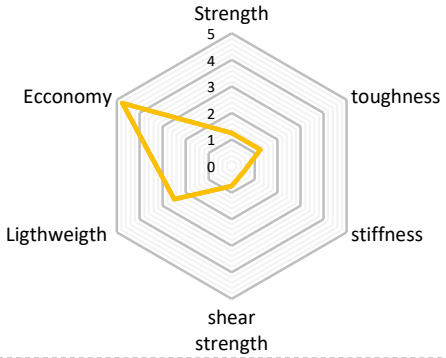	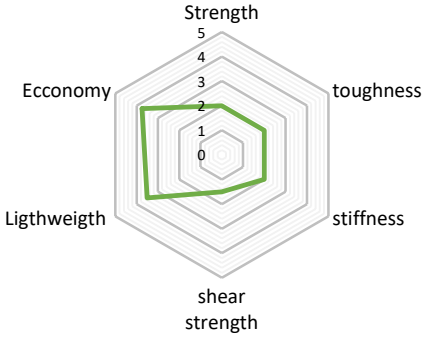	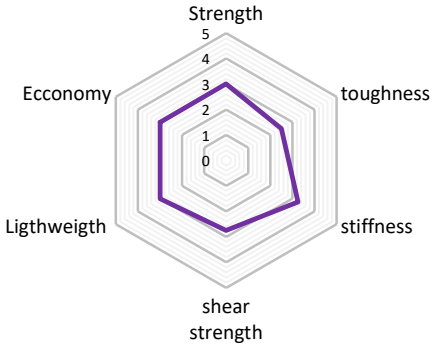	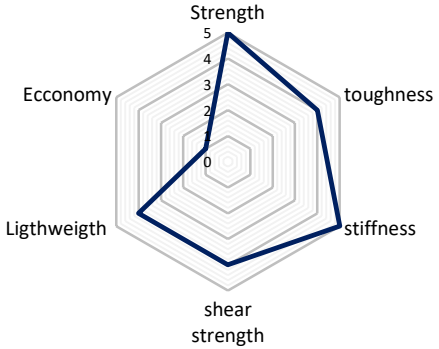

Suppliers and partners for materials

	• Advanced Composites • Asahi Kasei	• Asahi Kasei	• LanXess	• Barrday • Cytec • Tencate

Material Data Generation

Coupon Manufacturing

Barrday ADVANCED MATERIAL SOLUTIONS

LANXESS Energizing Chemistry

Material Sourcing

- Off the shelf materials were compared and most promising candidates were sources.

Material Processing

- Off the shelf materials were compared and most promising candidates were sourced.

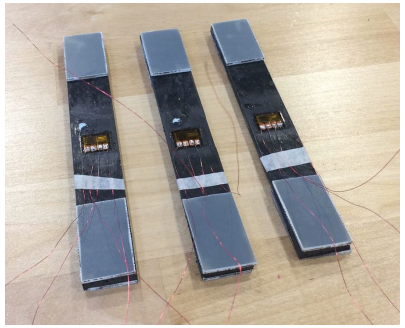

Bonding Strain Gauges

- Strain gauges were used in order to record true strain.

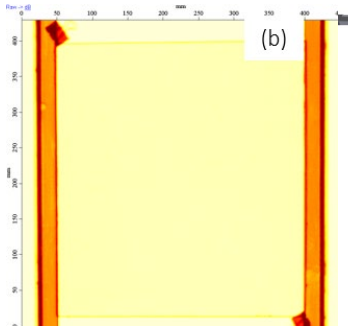

Sample Screening and Preparation

- 0 and 90 Samples were cut using a diamond coated blade.
- Scanned for voids using a CT scanner. Tabbed using epoxy-based adhesives.

Material testing

Tension

ASTM D 039

- Samples tested in 0° and 90° orientations
- At least 5 samples were tested
- Crosshead speed of 2.5 mm/min

Compression

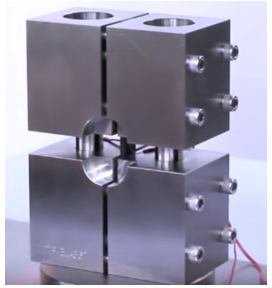

ASTM D6641

- Samples tested in 0° and 90° orientations
- At least 5 samples were tested
- Crosshead speed of 1.3 mm/min

Shear

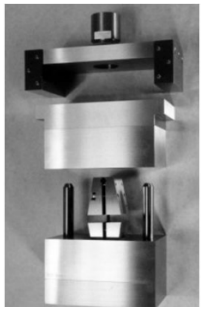

ASTM D3410

- Samples tested in 45° orientations
- At least 5 samples were tested
- Crosshead speed of 1.5 mm/min

Material Cards Selection

MAT 54

MID	RO	EA	EB	(EC)	PRBA	PRCA	PRCB
	1.462	59	59		0.05		
GAB	GBC	GCA	(KF)	AOPT	2WAY		
1.59							
XP	YP	ZP	A1	A2	A3	MANGLE	
						0.00	
V1	V2	V3	D1	D2	D3	DFAILM	DFAILS
						1000.0	1000.0
TFAIL	ALPH	SOFT	FBRT	YCFAC	DFAILT	DFAILC	EFS
0.000	0.100	1.00	0.100	5.165	1000.0	1000.0	0.16
XC	XT	YC	YT	SC	CRIT	BETA	
570.98	731	110.55	785	62.5	54.00	0.500	
PFL	EPSF	EPSR	TSMD	SOFT2			
100.0	0.050	0.950	0.950	1.000			
SLIMT1	SLIMC1	SLIMT2	SLIMC2	SLIMS	NCYRED	SOFTG	
0.001	0.200	0.001	0.200	1.000	10.00	1.000	

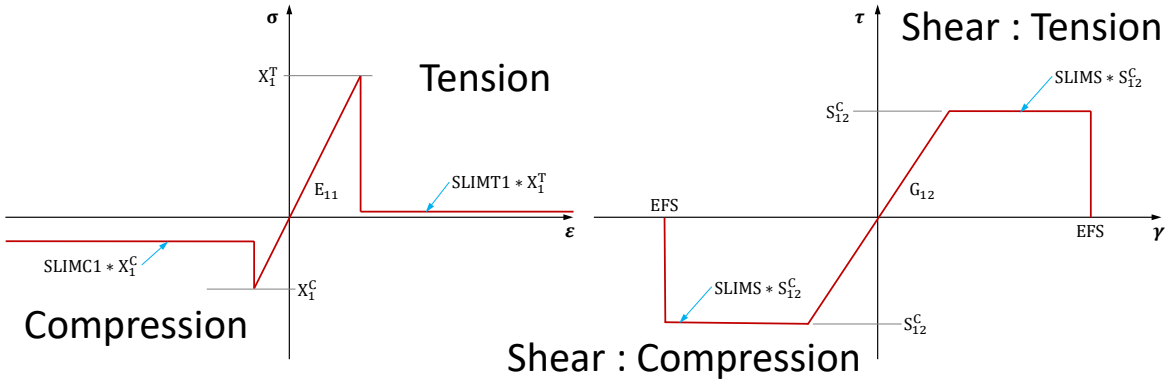

Both these models have been validated by our collaborators at University of Delaware in the B-Pillar project funded by NHTSA and BMW.

- Two LS-DYNA material models were considered, i.e., *MAT 54 and *MAT 59. Both material models have similar material model definitions and parameters except *MAT_054 is linear-elastic till maximum stress yield while *MAT_059 is non-linear up to the maximum stress yield.
- Even though *MAT_059 is non-linear, the parameters controlling the non-linearity is fixed and users have no control on those. With a conservative approach, *MAT_054
- The MAT 8 material model was used for the static load cases. It defines the material properties for linear temperature-independent orthotropic material for two-dimensional elements

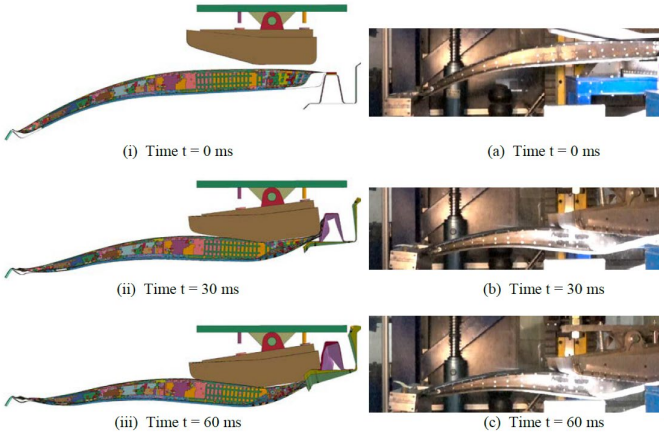

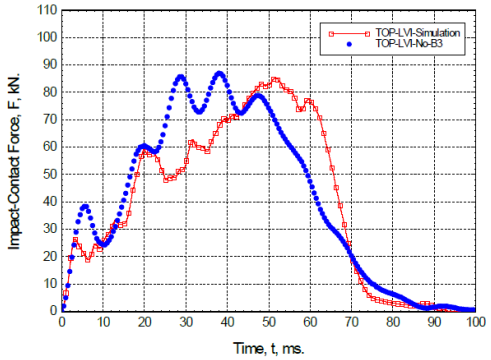

(a) Force vs. Time

1. Composite B Pillar 2. Deformation @ high velocity crash loading 3. Experimental vs Simulation

Material Testing : Endless Fiber Reinforced Polymer

Tension 0 and 90

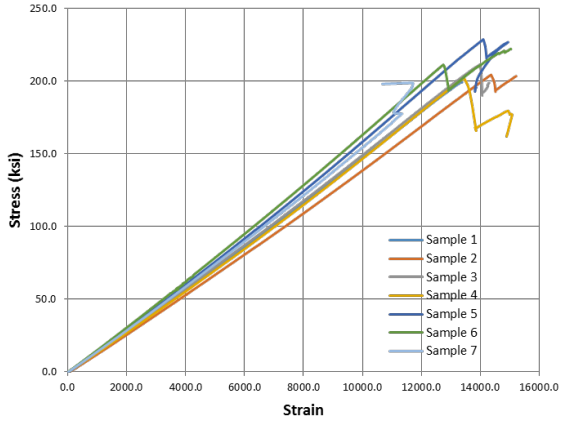

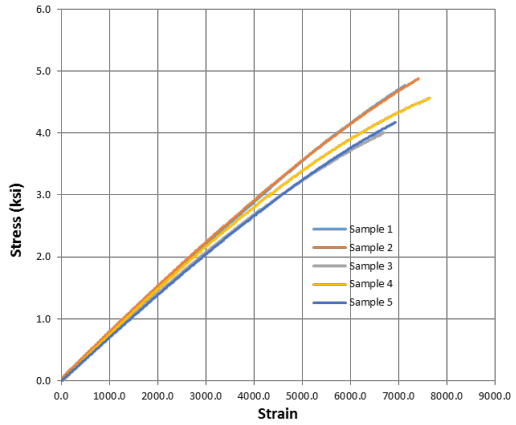

Compression 0 and 90

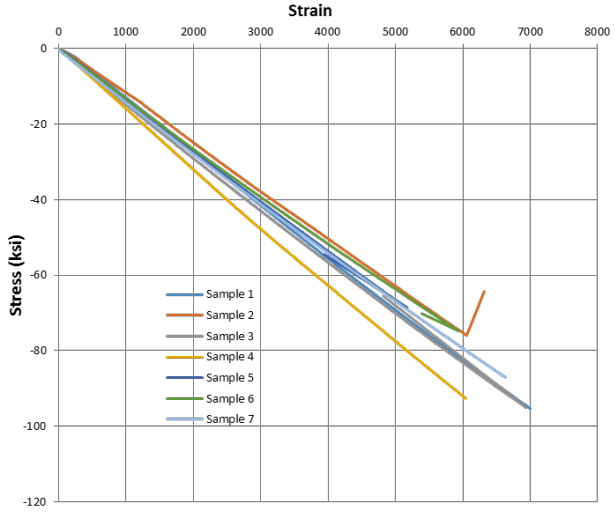

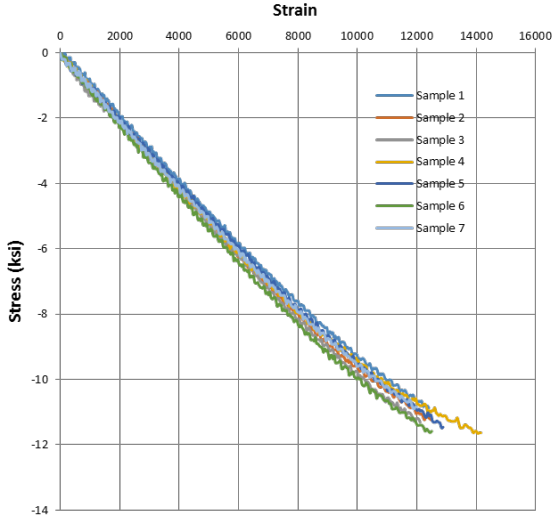

In-Plane Shear (Tension and Compression)

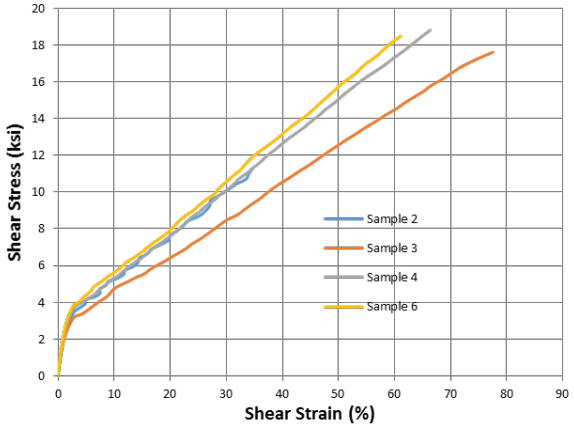

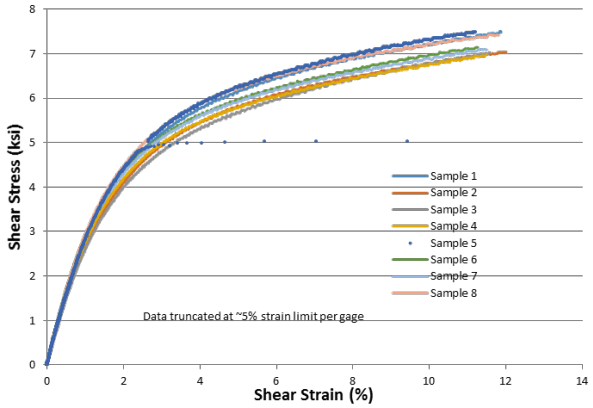

- In-plane shear behavior was characterized using the tension and compression tests on a [±45º] laminate.
- Tension mode allowed fiber rotation due to the thermoplastic matrix toughness and axial strain was measured using optical methods with markers and high-resolution video cameras.
- Compression mode was performed using the shear-loaded compression method (IITRI) and strains measured to the limit of strain gages.

Material Testing : Woven Fiber Reinforced Polymer

Tension 0 and 90

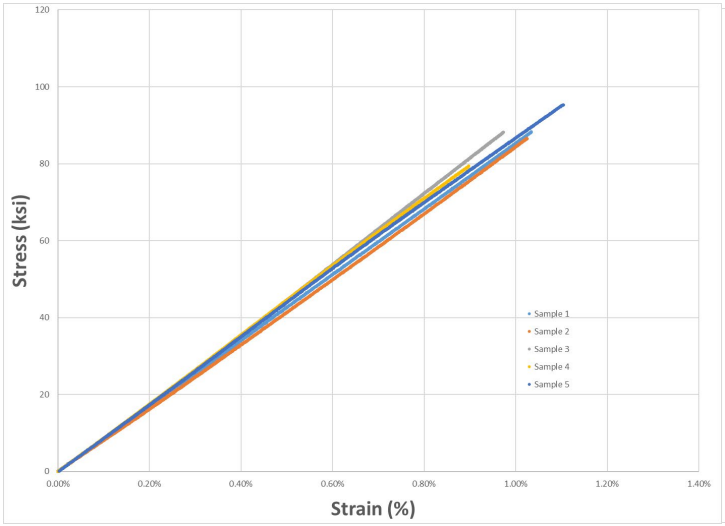

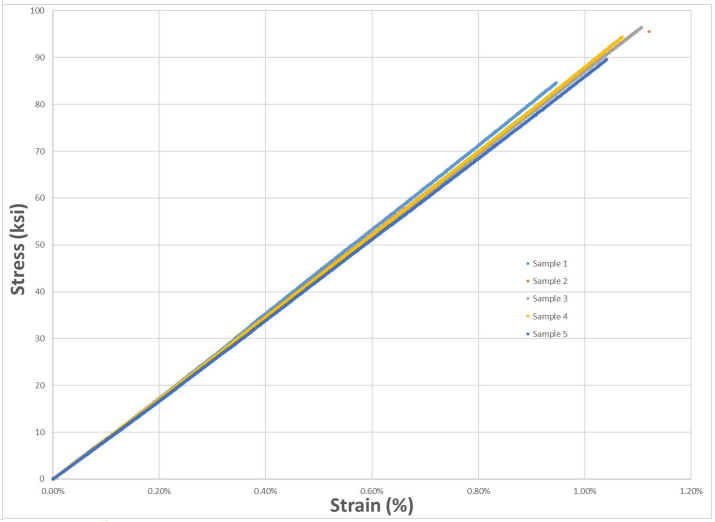

In-Plane Shear (Compression)

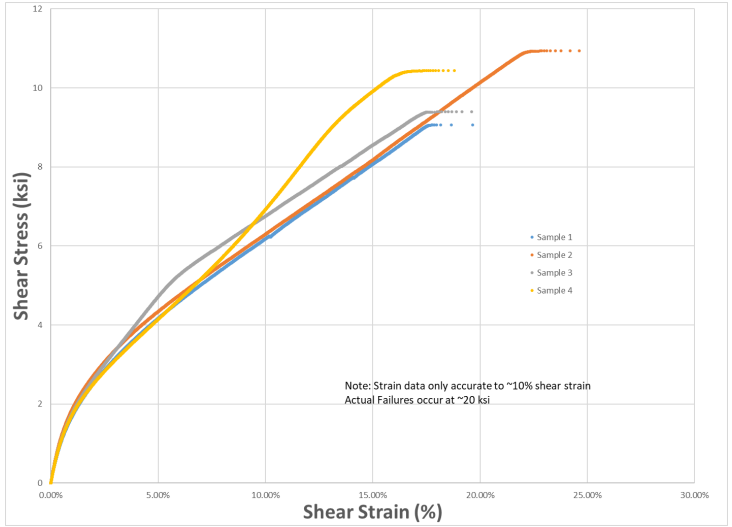

Compression 0 and 90

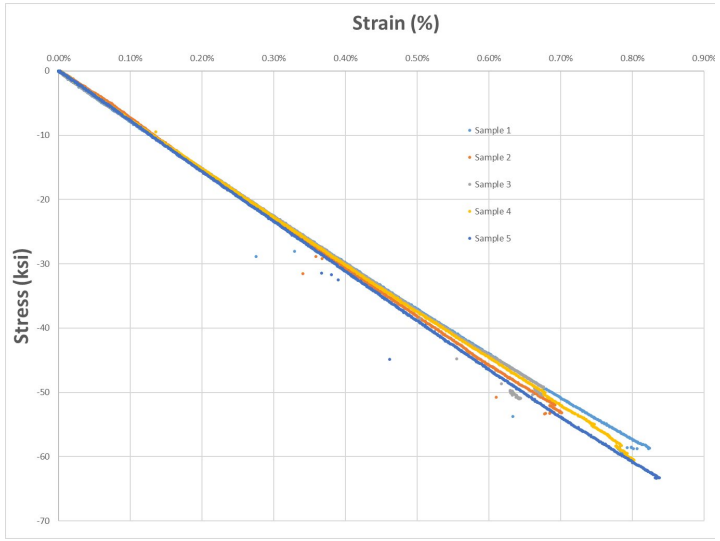

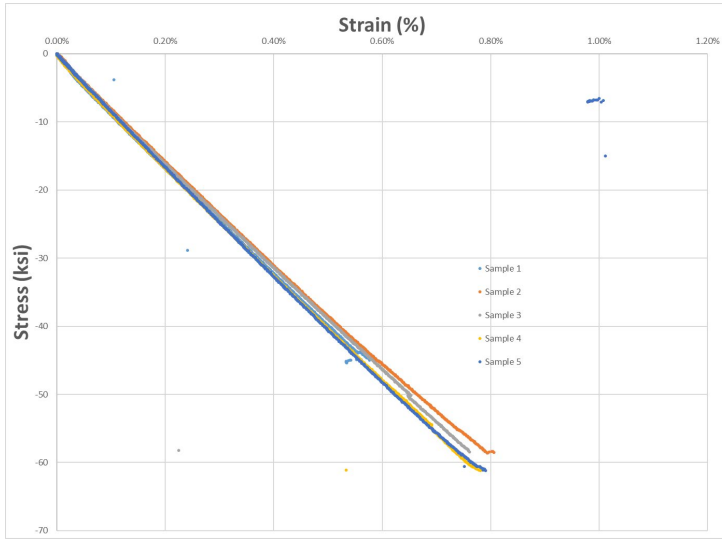

- Compression mode was performed using the shear-loaded compression method (IITRI) and strains measured to the limit of strain gages.
- Load-displacement response was used to identify plateau stress and displacement limits.

Concept Development

- Concept development
- Sub-components detailing
- Multi-material strategy

Year 1&2: Concept Development Summary

Phase 1
2016

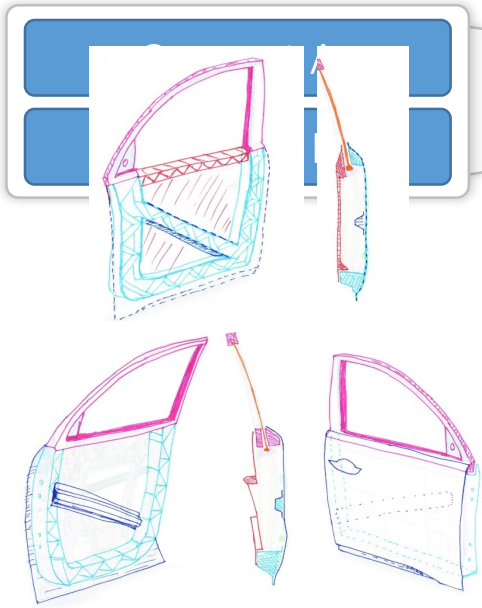

- Hand drawn sketches.
- High level material selection.

Phase 2
2016

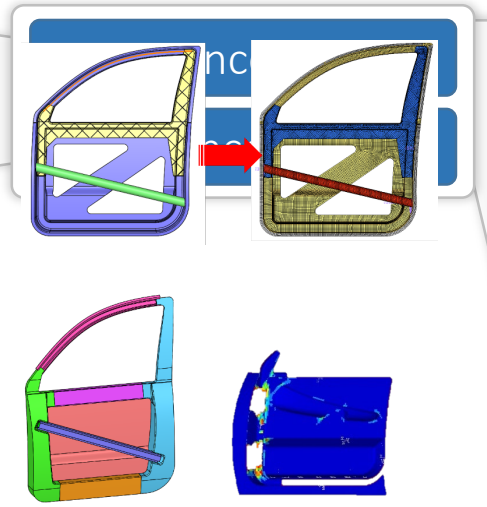

- Rough CAD models using generic door geometries.
- Initial FEA simulations for simple static load cases.

Phase 3
2016

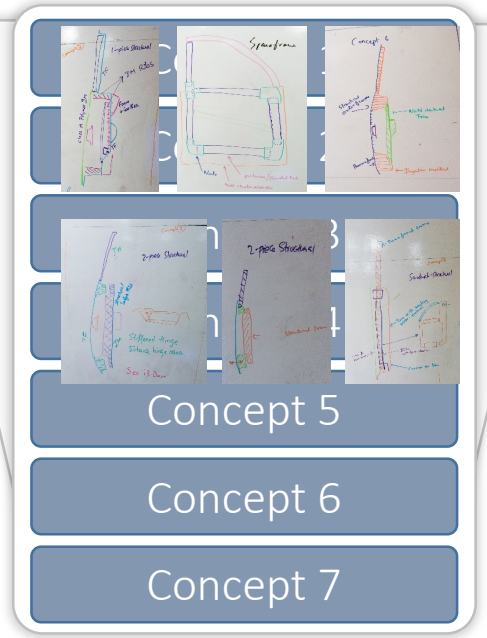

- Design workshop was conducted at CUICAR.
- The team developed and hand-sketched 7 concepts for door frame.

Phase 4 & 5
2017

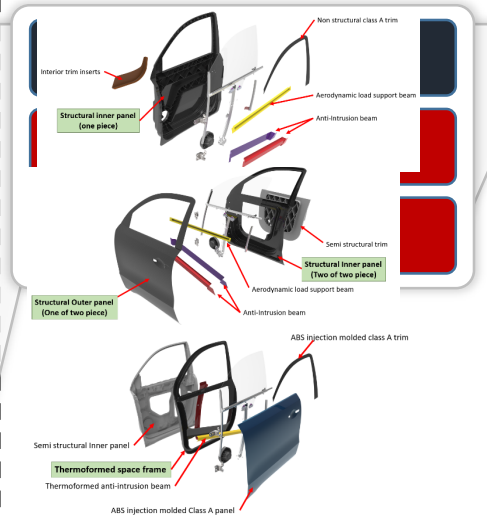

- Detailed CAD models were generated.
- FEA simulations were performed to validate static performance in compliance with Honda's targets.
- Down selection to one concept.

Phase 6
2018

Final Design (C2)

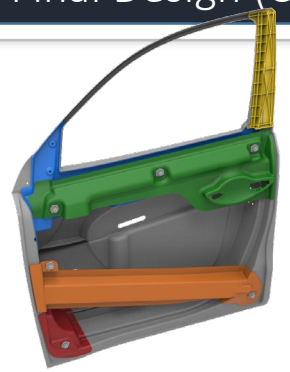

- FMVSS 214 static test performance was used as metric for concept down selection.

Year 3: Concept Development Summary

Key changes

- New outer beltline stiffener
- New lower door stiffener
- Sash reinforcement integrated into the inner beltline stiffener for part consolidation.

Design version 7 - 2018

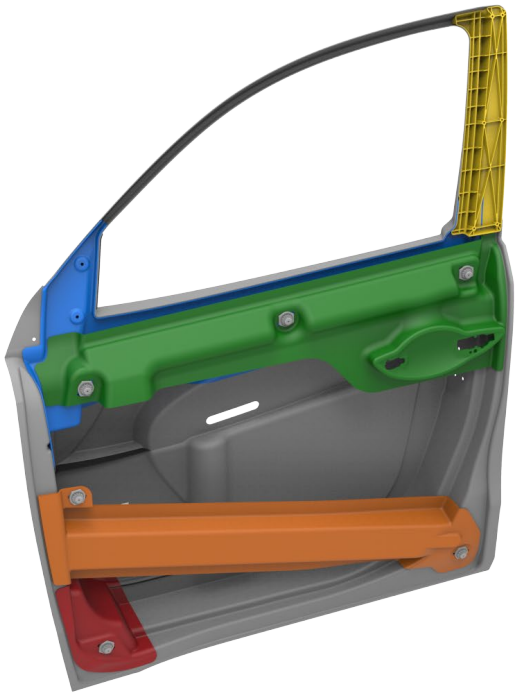

Design version 11 - 2019

Concept Details: Inner Panel

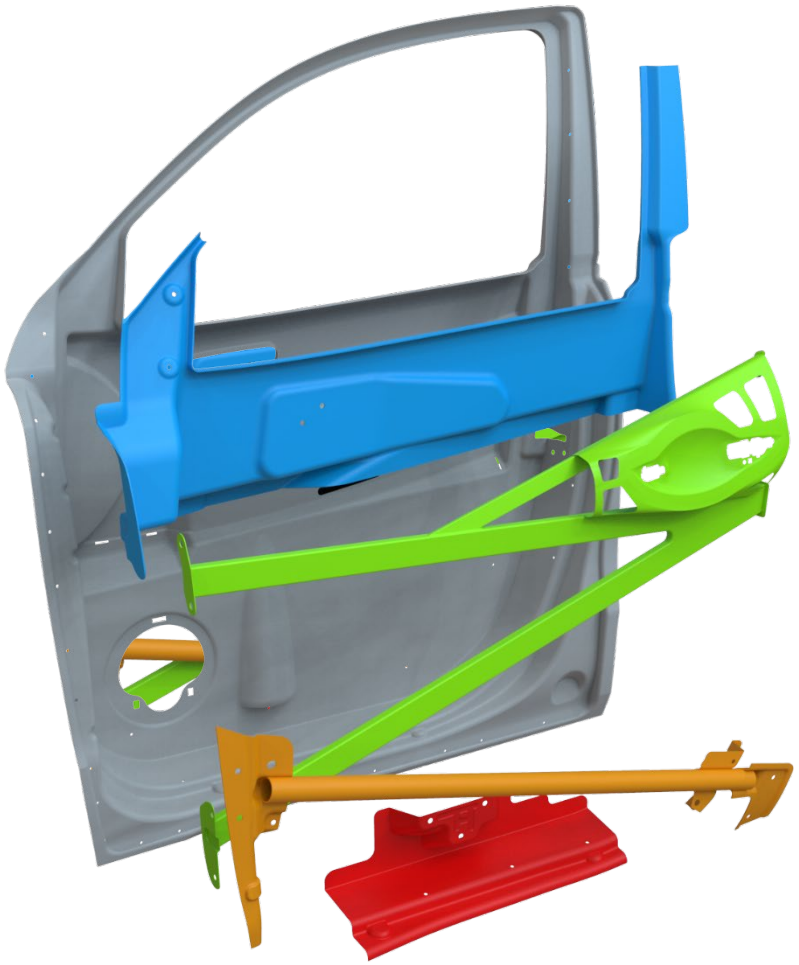

Structural components of inner panel

1. Inner frame
   - Thermoformed inner panel with integrated trim.
   - Material: Woven fabric with UD reinforcements.
2. Anti intrusion beam
   - Hot stamped and welded
   - Material: Ultra high strength steel
3. Inner beltline stiffener
   - Thermoformed shell with mounting interfaces for the inner components.
   - Material: Woven fabric with UD reinforcements.
4. Outer beltline stiffener
   - Extruded aluminum beams with a stamped handle mount.
   - Material: Aluminum 6061
5. Lower Reinforcement (**New Part**)
   - Stamping
   - Material: Aluminum 6061

Design Overview

Design philosophy

- Maximize functional integration
- Minimize part count
- Eliminate lazy material by optimization
- Simplify assembly

42.5% Lightweighting	$950 Cost target

Design highlights

- One piece structural frame
- Removable class A panel
- No trim panel

Concept Design Overview

All door subsystems can be divided into 4 major categories

1. Interior trim
2. Inner frame
3. Door internals
4. Class A panel

Concept Details: Class A Panel

- Added reinforcement to the injection molded outer panel for preventing oil- caning, and improving stiffness for aerodynamic loads
- Reduced wall thickness from 2.2 mm to 1.2mm
- Almost no impact on weight

Outer Side

Inner Side

Concept Details: Interior Trim

To minimize weight and cost, this concept has no interior panel. Instead it has a few injection molded parts to meet functional requirements.

Non-structural trim components

1. Upper padding
   - Leather laminated with foam.
2. Middle padding
   - Leather laminated with foam.
3. Hand rest
   - Natural wood, back molded with ABS
4. Map pocket
   - Injection molded carbon fiber SFT or ABS

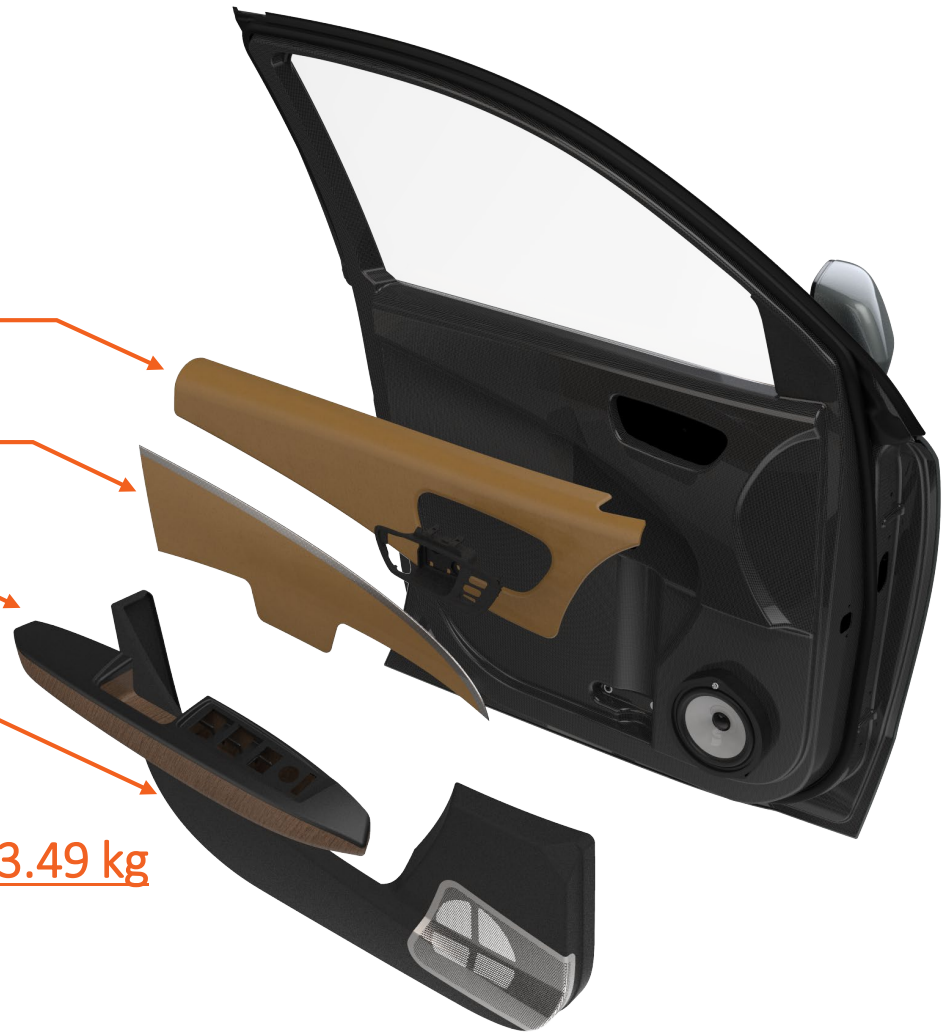

These parts approximately weigh 1.34 kg in contrast to 3.49 kg in baseline door. Further weight reduction of 0.25Kg is expected with optimization.

Finite Element Strategy

- Load requirements breakdown
- Concept design performance : Static performance
- Concept design performance : Dynamic performance

Phase I FEA Optimization : Static Load Cases

a. Door sag (DS)
b. Door sash (A and B)
c. Door over opening
d. Beltline stiffness
e. Mirror mount rigidity
f. Speaker mount stiffness
g. Door handle pull rigidity
h. Map pocket pull rigidity
i. Window regulator (figure not displayed here)

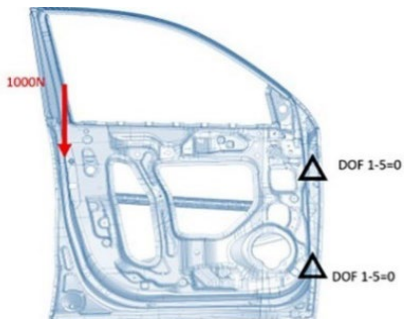

(a)

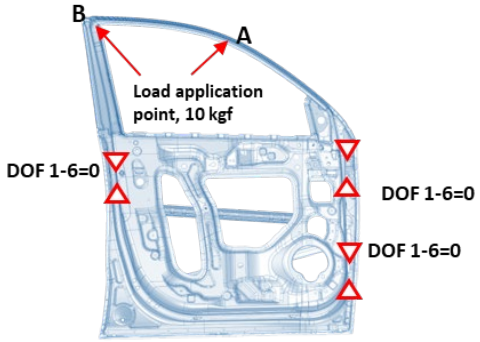

(b)

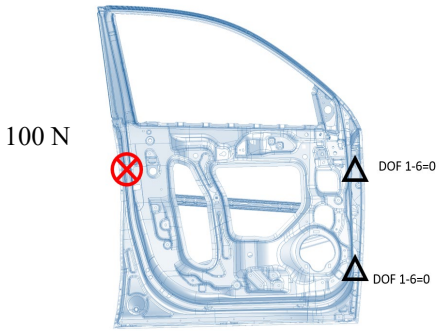

(c)

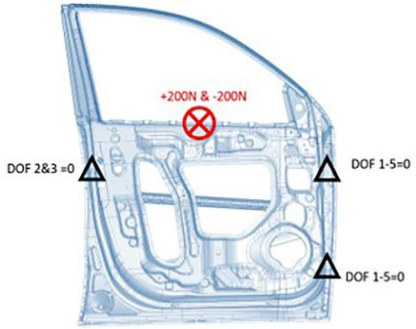

(d)

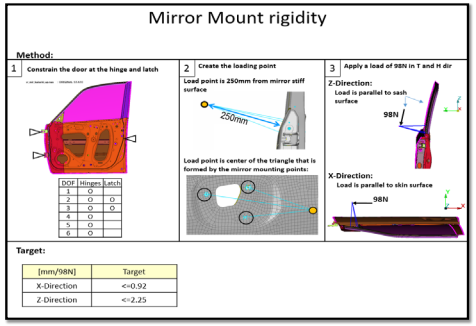

(e)

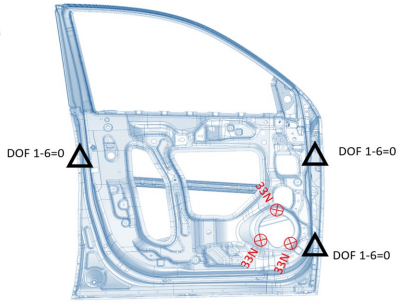

(f)

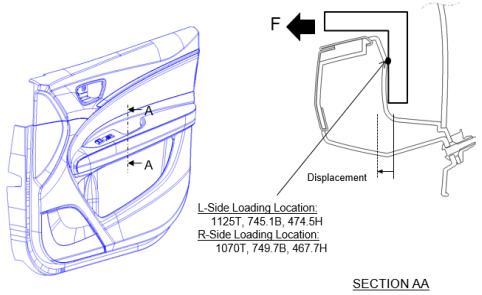

(g)

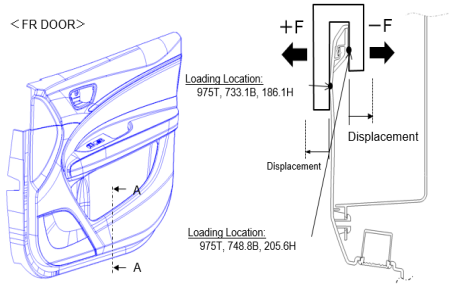

(h)

Modelling Endless Fiber & Woven Materials

- These are materials are anisotropic by design
- FEA Material model inputs known based on our MAT 54 card
- Good knowledge base for FEA simulation exists with our collaborators at Clemson University and University of Delaware

PLY	Laminate Design	Layup Design
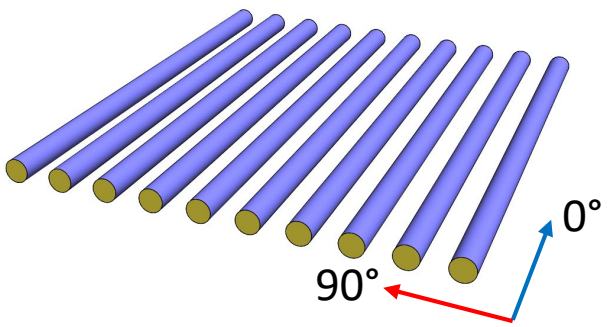	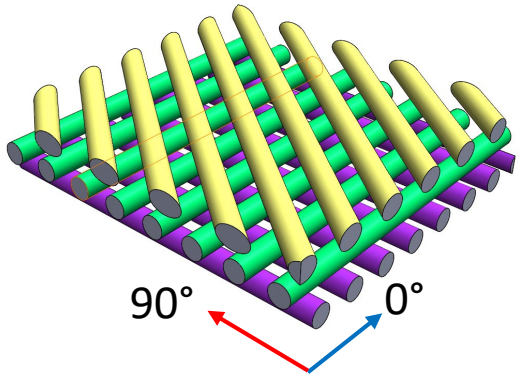	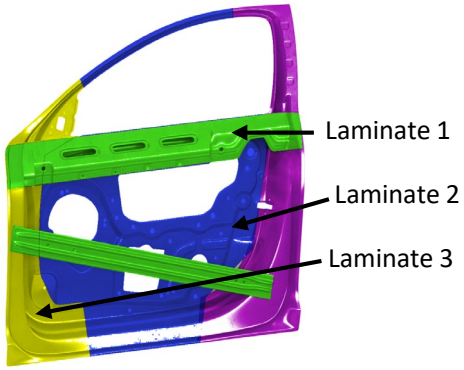
• Manufacturability • Performance requirement • Commercial availability	• Performance driven • Can use FEA optimization to determine laminates	• Performance driven • Manufacturability • Can use FEA optimization to determine laminates

Static Performance (Daily Use and Misuse)

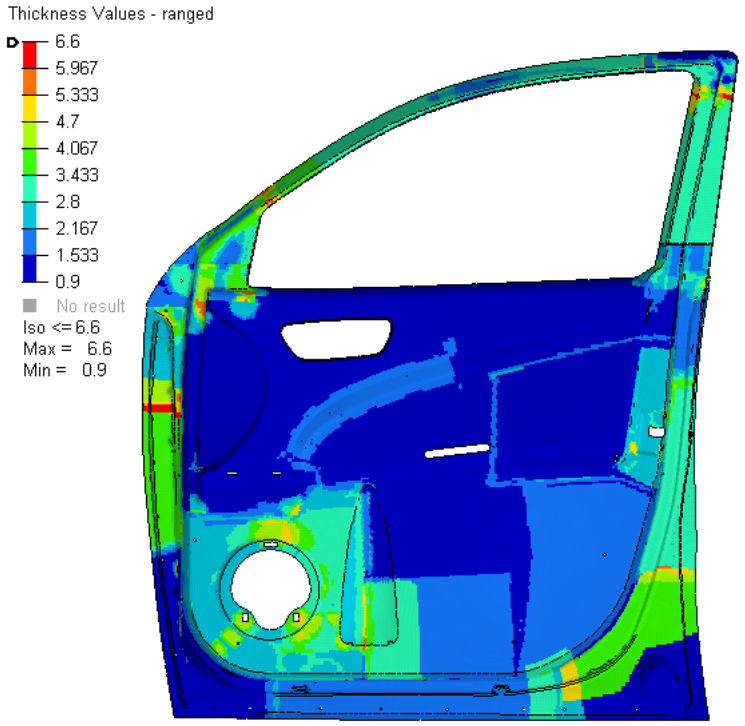

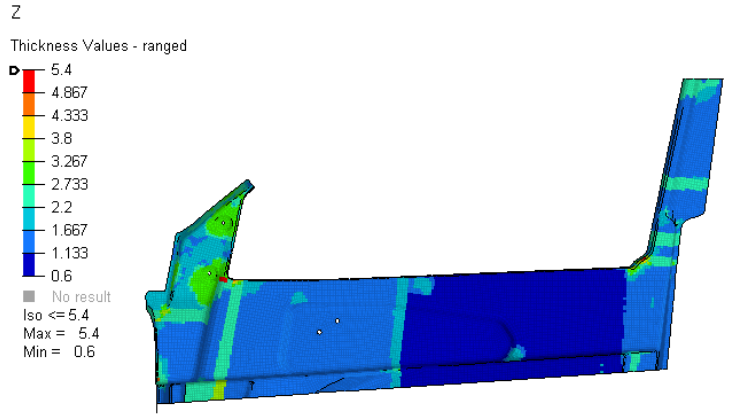

- These linear load cases represent door performance for daily use and occasional misuse of the door
- These targets are used for optimizing the composite ply configurations

Targets				Baseline Door	Composite Door (V11)
Structural frame mass	<	7.26	Kg	15.1	8.3
Door Sag - Fully open	<	5	mm	3.5	2.89
Sash Rigidity at point A	<	3.5	mm	0.93	2.9
Sash Rigidity at point B	<	4	mm	0.91	2.29
Beltline stiffness-Inner panel	<	1.5	mm	1.34	0.59
Window regulator (Normal)	<	1	mm	6.88	0.73
Mirror Mount rigidity in X	<	0.92	mm	0.57	0.92
Mirror Mount rigidity in Y	<	2.25	mm	0.86	0.97
Door Over opening	<	Baseline	mm	24.7	18.52
Speaker mount stiffness	<	Baseline	mm	0.35	0.18

Dynamic load cases

1. FMVSS 214s (static)

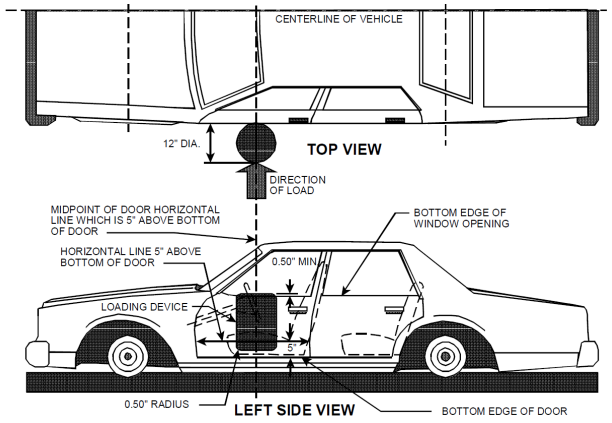

A cylindrical barrier is used to deform the door for 18 inches under quasi static loading condition.

2. FMVSS 214 (DB)

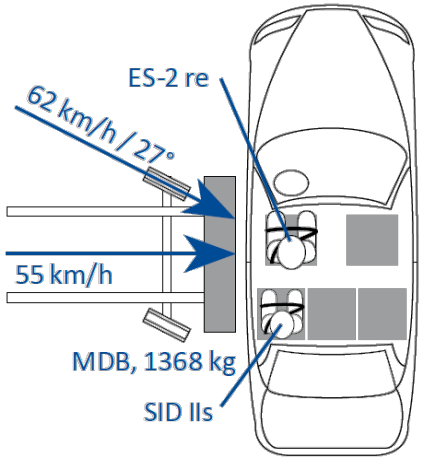

A moving deformable barrier is impacted with a stationary vehicle at 55 km/h.

1. FMVSS 214 (RP)

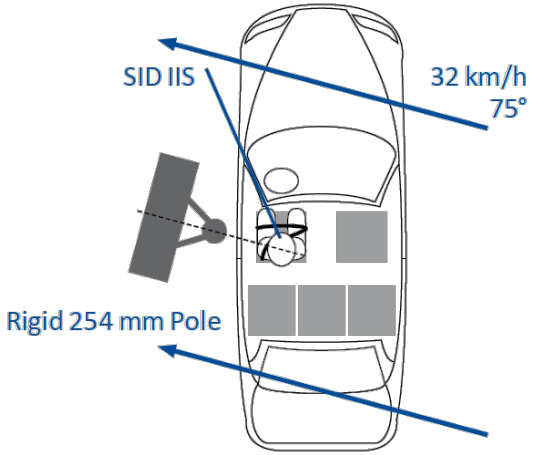

The vehicle is rammed into a rigid pole at 32 km/h at 75 deg.

FMVSS 214: Quasi Static Pole Test

- Has higher force response than baseline steel door.
- Significant crush resistance is offered even after the inner panel fails.

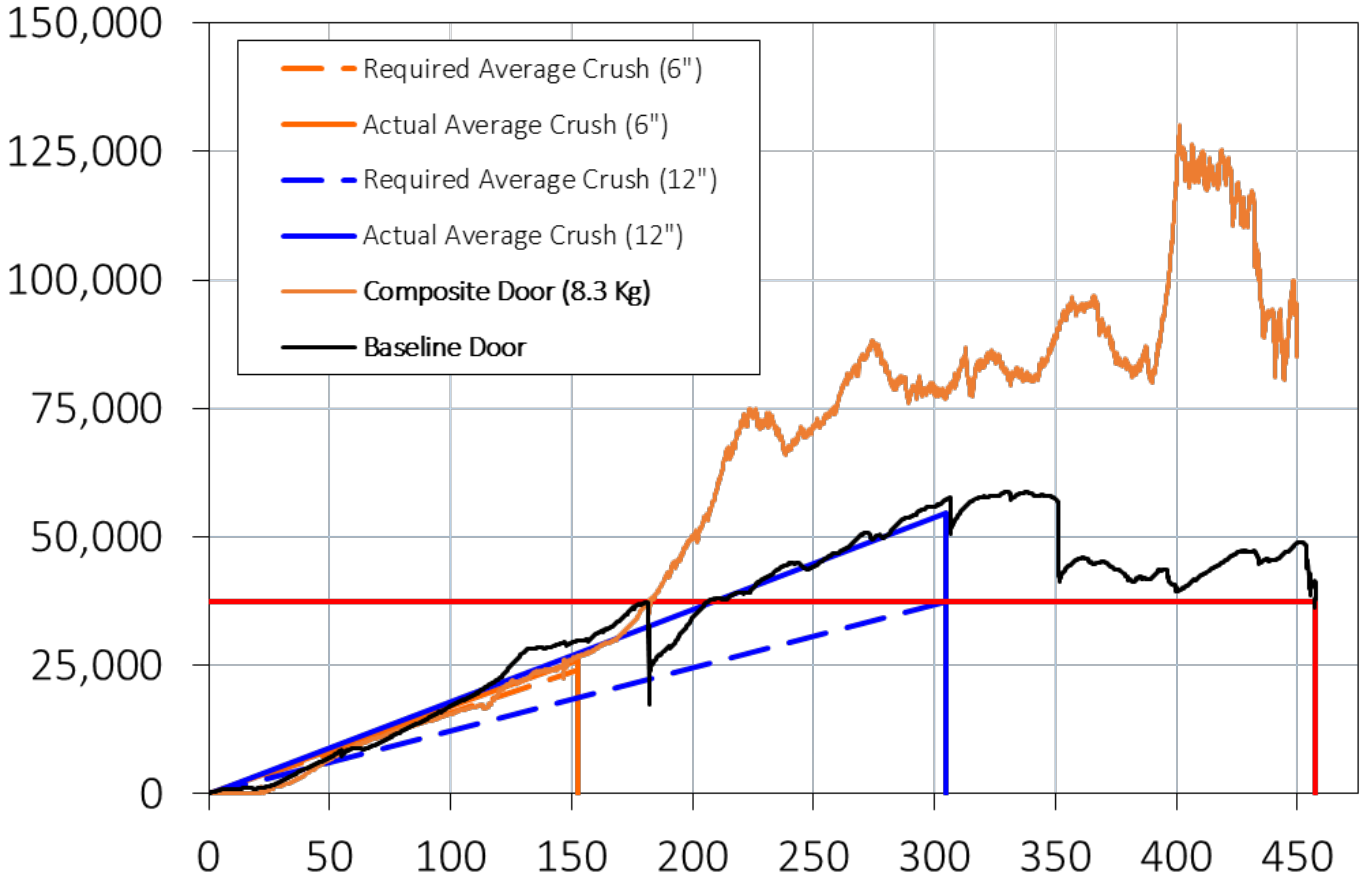

Baseline steel door

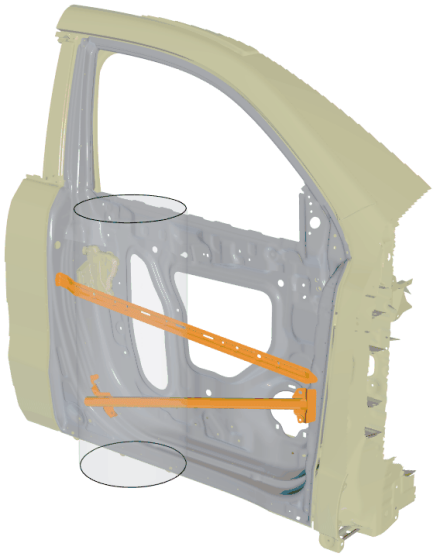

Composite door

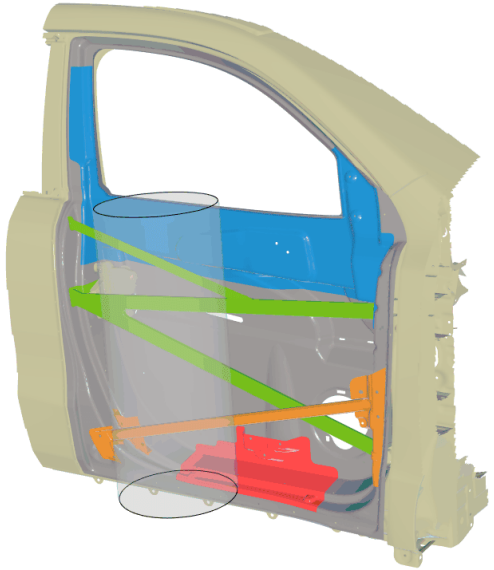

IIHS Side Impact Protocol (MDB)

- The moving deformable barrier (MDB) impacts the car perpendicularly. Such configuration together with the barrier bumper height makes this test more challenging than FMVSS 214
- The impact speed is 50 km/h and the impact mass is 1500 kg
- The composite door outperforms the baseline steel door

Baseline steel door

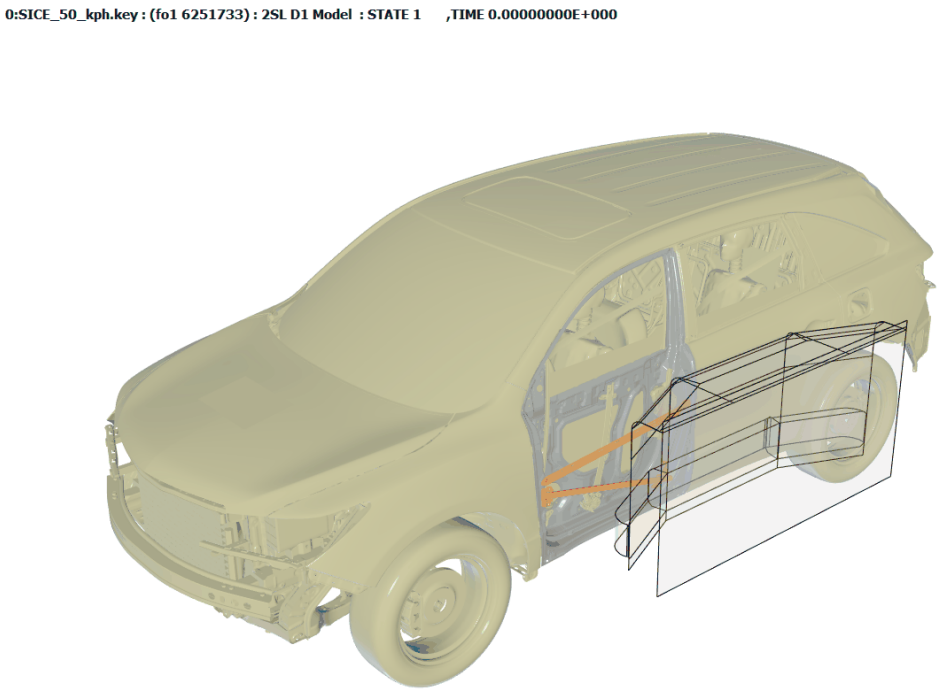

Composite door

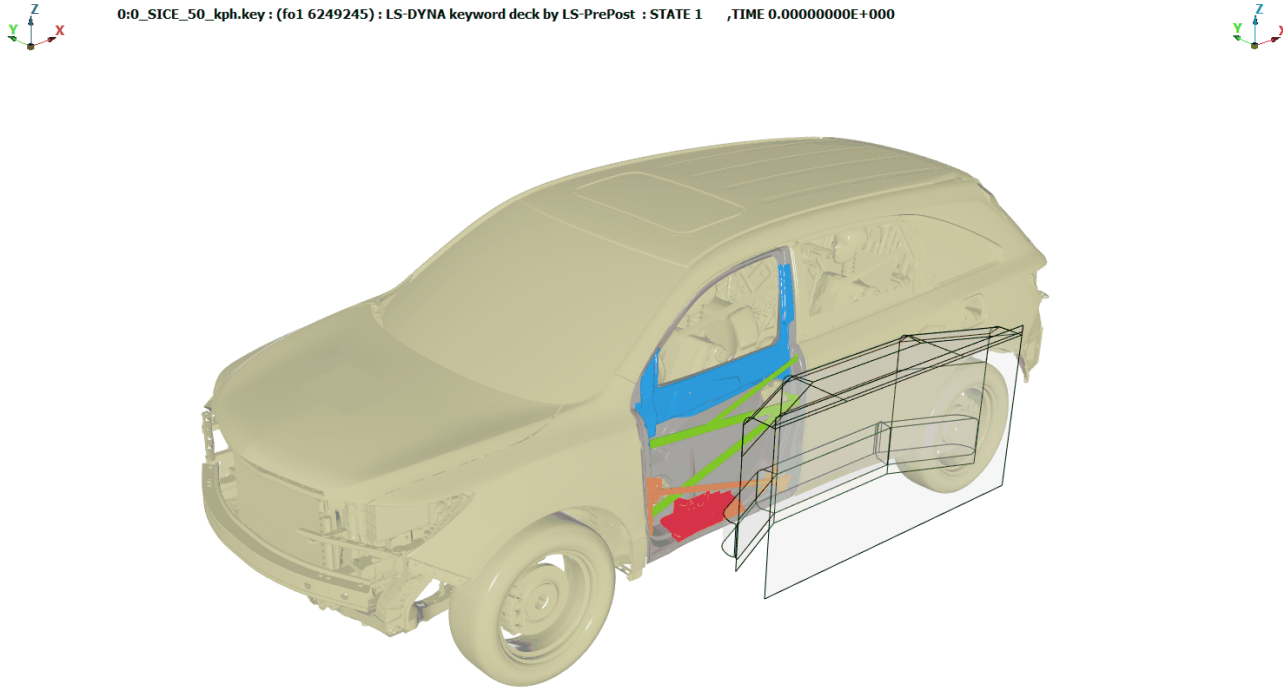

Gauging Metrics for IIHS SI- MDB

- Success (Green)
  - Below baseline target values (<b)
- Tolerable (Yellow)
  - More than baseline values but smaller than 10 % difference (>b, <b+10%)
- Failure (Red)
  - More than 10% above baseline value (>b+10%)
- No exposed crack in the door interior.

Key Performance Indicator	Baseline [mm]	Composite [mm]	Difference [mm]	Difference [%]
Occupant survival space	134.3	140	5.7	4.2%
Maximum intrusion at roof	62.1	48.16	-13.94	-22.45%
Maximum intrusion at window sill intrusion	279	233	-46	-16.5%
Intrusion at hip location of the dummy	175.6	125.64	-49.36	-28.1%
Maximum intrusion at lower door region	210.4	205.76	-4.64	-2.2%

Baseline steel door

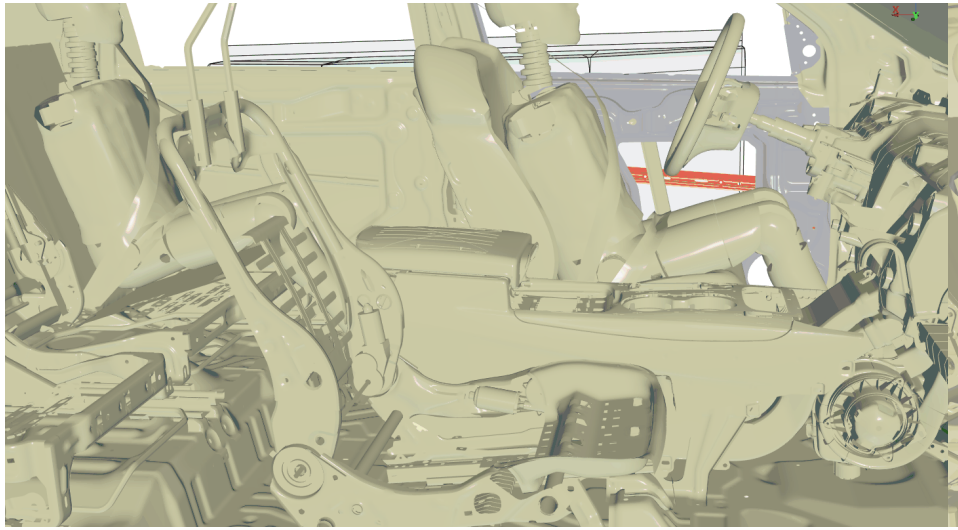

Composite door

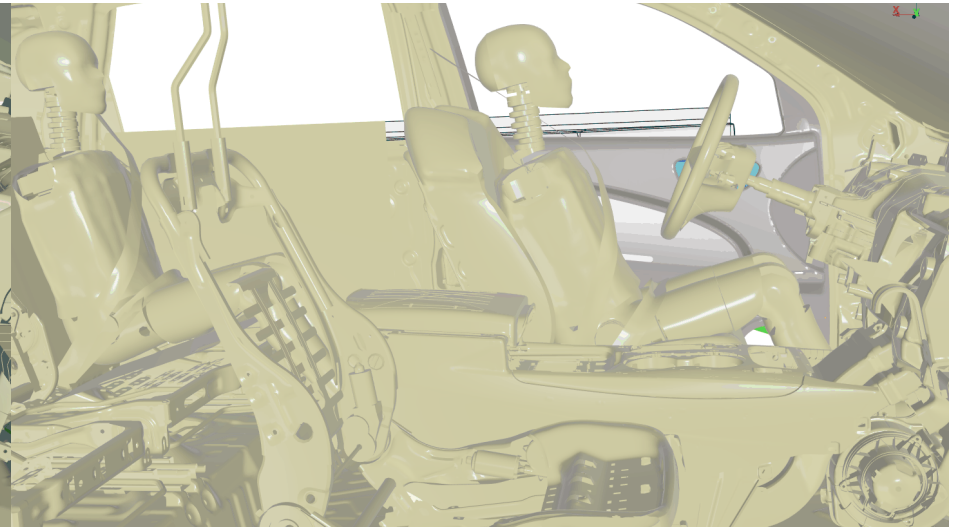

FMVSS 214 Rigid Pole

- In this crash mode, the vehicle is mounted on a mobile platform and is impacted with a rigid pole at 75° to the length of the vehicle
- For this test, a hybrid III 5th percentile female crash dummy was used for positioning the vehicle since it is the most challenging crash mode for the rigid pole test
- The composite door had adequate performance in this test

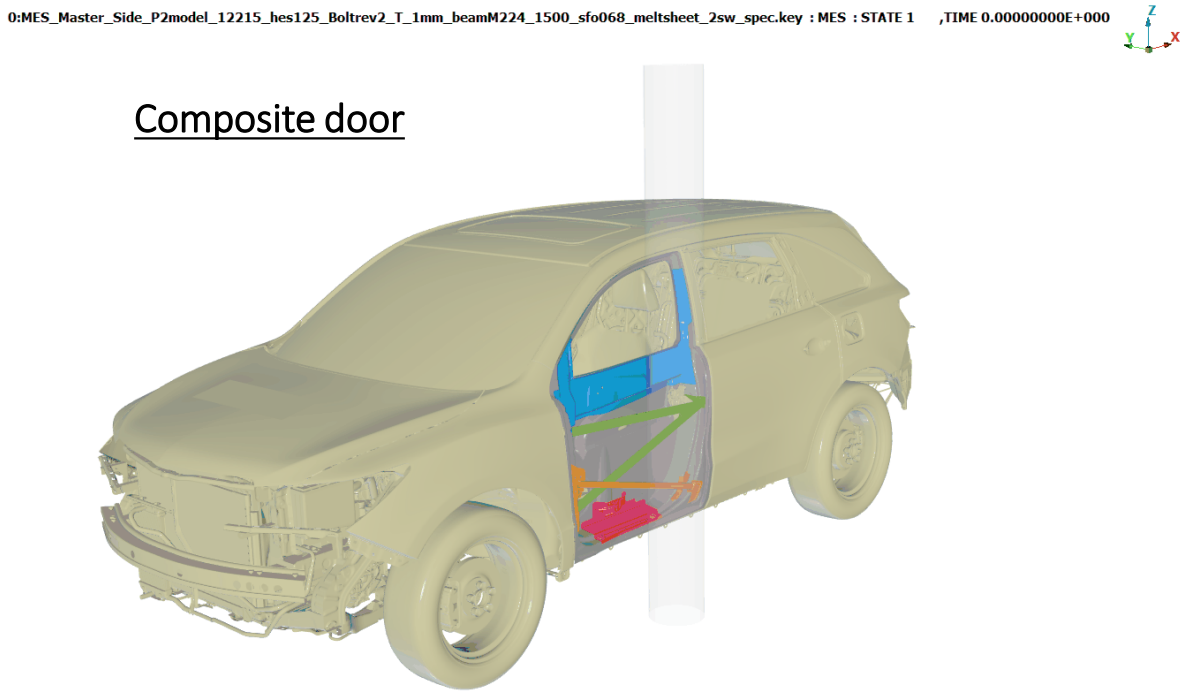

Gauging Metrics for FMVSS 214 Rigid Pole

- Success (Green)
  - Below baseline target values (<b)
- Tolerable (Yellow)
  - More than baseline values but smaller than 10 % difference (>b, <b+10%)
- Failure (Red)
  - More than 10% above baseline value (>b+10%)
- No exposed crack in the door interior.

Key Performance Indicator	Baseline [mm]	Composite [mm]	Difference [mm]	Difference [%]
Maximum intrusion at B-pillar	150.9	164	13.1	8.68%
Maximum intrusion at sill intrusion	293.4	287.6	-5.8	-1.98%
Maximum intrusion at roof	254	259.8	5.8	2.28%
Maximum intrusion at window sill intrusion	434.5	438.1	3.6	0.83%
Intrusion at Hip location of the dummy	355.3	336.5	-18.8	-5.29%
Maximum intrusion at lower door region	440.3	443.1	2.8	0.64%

Baseline steel door

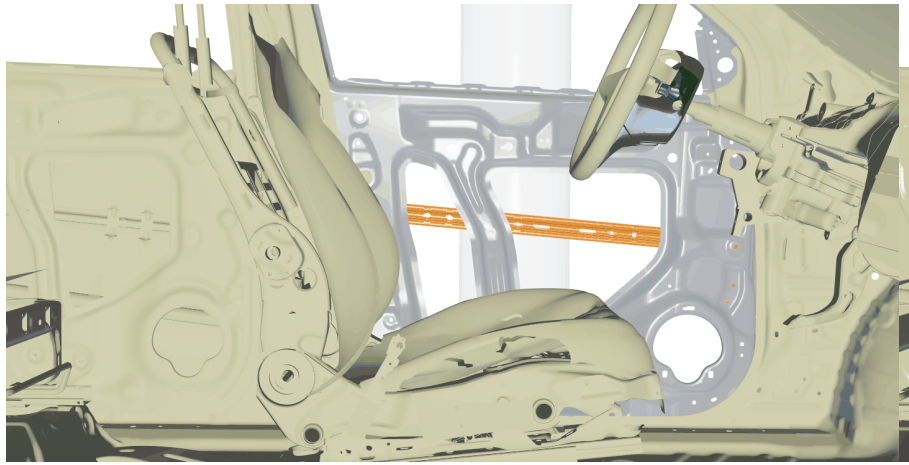

Composite door

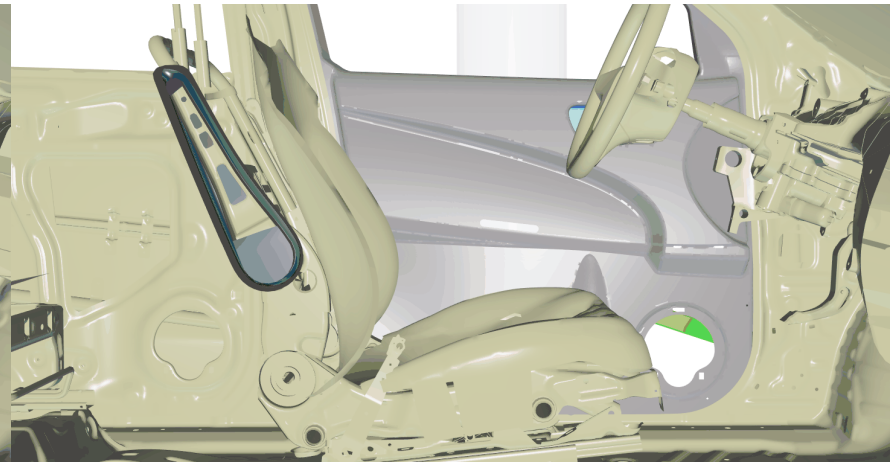

Summary

- Material Card Development
  - Material testing and card development loops were carried out for endless and woven carbon fiber reinforced PA 66 composites were successfully carried out.
  - MAT 8 and MAT 54 cards were developed for Static and Dynamic load cases.

- Design Development
  - A multi-material strategy that leverages the stiffness of endless and woven composites with the plasticity of steel was developed. Where a steel anti-intrusion beam was lighter and cost effective than a composite alternate.

- Static and Dynamic Load Requirements
  - Proposed design was able to meet static load and dynamic load targets (FMVSS 214 s, 214 (DB), 214 (RP)) in line with NHTSA and OEM Partners targets.

Collaborations

Key Organizations	Role	Responsibilities
CLEMSON UNIVERSITY	Principal investigator	• Project management • Design development • Discontinuous fiber material characterization • Tooling design & simulation • Manufacturing • Linear, Non-linear & NVH analysis • Cost modeling & factory layout
UNIVERSITY OF DELAWARE	Co - PI	• Non-Linear analysis • Continuous fiber material characterization
HONDA The Power of Dreams	OEM Partner	• Target definitions • Student mentoring • Computation support for running complex simulations • Component & vehicle crash testing
CORNING	Supplier	• Lightweight glazing design & prototyping

Suppliers, software and general participants

LANXESS Energizing Chemistry · BASF We create chemistry · Barrday Advanced Material Solutions · Altair · LSTC Livermore Software Technology Corp. · MSC Software · Moldex3D Molding Innovation · SIEMENS

The Team

Core Participant Profiles

Institution	Advisor	Personal	Standing
CLEMSON UNIVERSITY	Srikanth Pilla (PI)	Veera Aditya Yerra	PhD students
		Sai Aditya Pradeep	
	Gang li (Co-PI)	Anmol Kothari	
		Madhura Limaye	
		Gaurav Dalal	Master's Student
	Srikanth Pilla	Senthil Ramesh	Master's Student
UNIVERSITY OF DELAWARE	Shridhar Yarlagadda (Co-PI)	Bazle Haque	Research Faculty
		Lukas Fuessel	Visiting scholar
HONDA The Power of Dreams	OEM Partner	Skye Malcolm	Principal Engineer
	OEM Partner	Duane Detwiler	Chief Engineer

No. of students worked/working on this project: 7

Future Work

1.Manufaturing simulations and tooling

Develop manufacturing simulations, tooling designs and collaborate with tooling and prototyping partners.

1. Manufacturing simulations for thermoforming and injection molding.
2. Thermoforming tooling and process design
3. Injection molding tool design

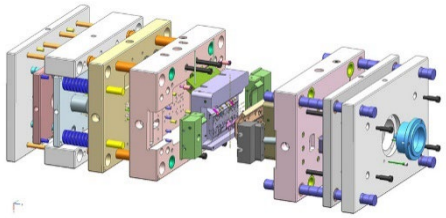

2.Mass production plan and cost model refinement

Developing mass production processes and implementing them in a virtual plant layout tool and determining the costs for the same.

1. Virtual plant layouts for mass production.
2. Developing costing models for estimation and optimization.

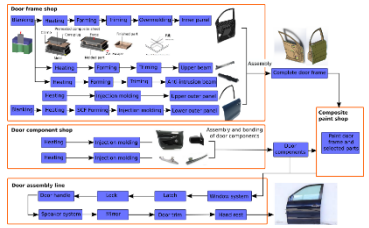

3.Prototype manufacturing

Manufacturing functional prototypes with actual material systems.

1. Prototype door frames with actual material system and manufacturing process similar to mass production.

4.Testing

Subject the door to similar tests which were preformed on the baseline door.

1. Mechanical testing for stiffness.
2. Crash testing
3. Fit and Finish
4. Accelerated aging

Acknowledgment to

Vehicle technology office DE-EE0007293

Honda R&D Americas

Thankyou.