Additive Manufacturing to Automotive Manufacturing: The Challenges of Volume Production

Ellen C. Lee, Additive Manufacturing Technical Leader, Ford Motor Company

ROADMAP

- **Why AM?** Efficiency, agility, performance
- **History of AM at Ford:** Over 30 years of use and exploration
- **Use cases today:** Prototyping, Manufacturing, Production
- **Case study: Validation of production AM applications**
  - Materials
  - Function
  - Manufacturing
- **Automotive industry requirements**
- **Bridging the Gaps**

WHY ADDITIVE DESIGN AND MANUFACTURING?

Business Efficiencies

Design, Engineering & Validation

prototyping

Manufacturing Efficiencies

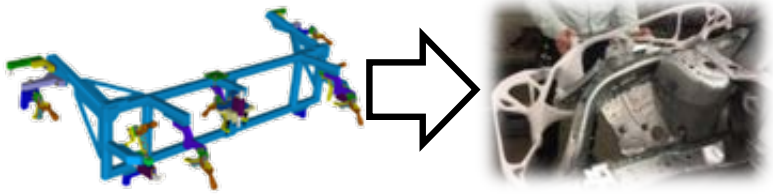

Distributed Sourcing

MRO inventory

New Market Share / Revenue / Performance

Customer Attributes

Can AM Change the Automotive Manufacturing Landscape?

HISTORY OF ADDITIVE MANUFACTURING AT FORD

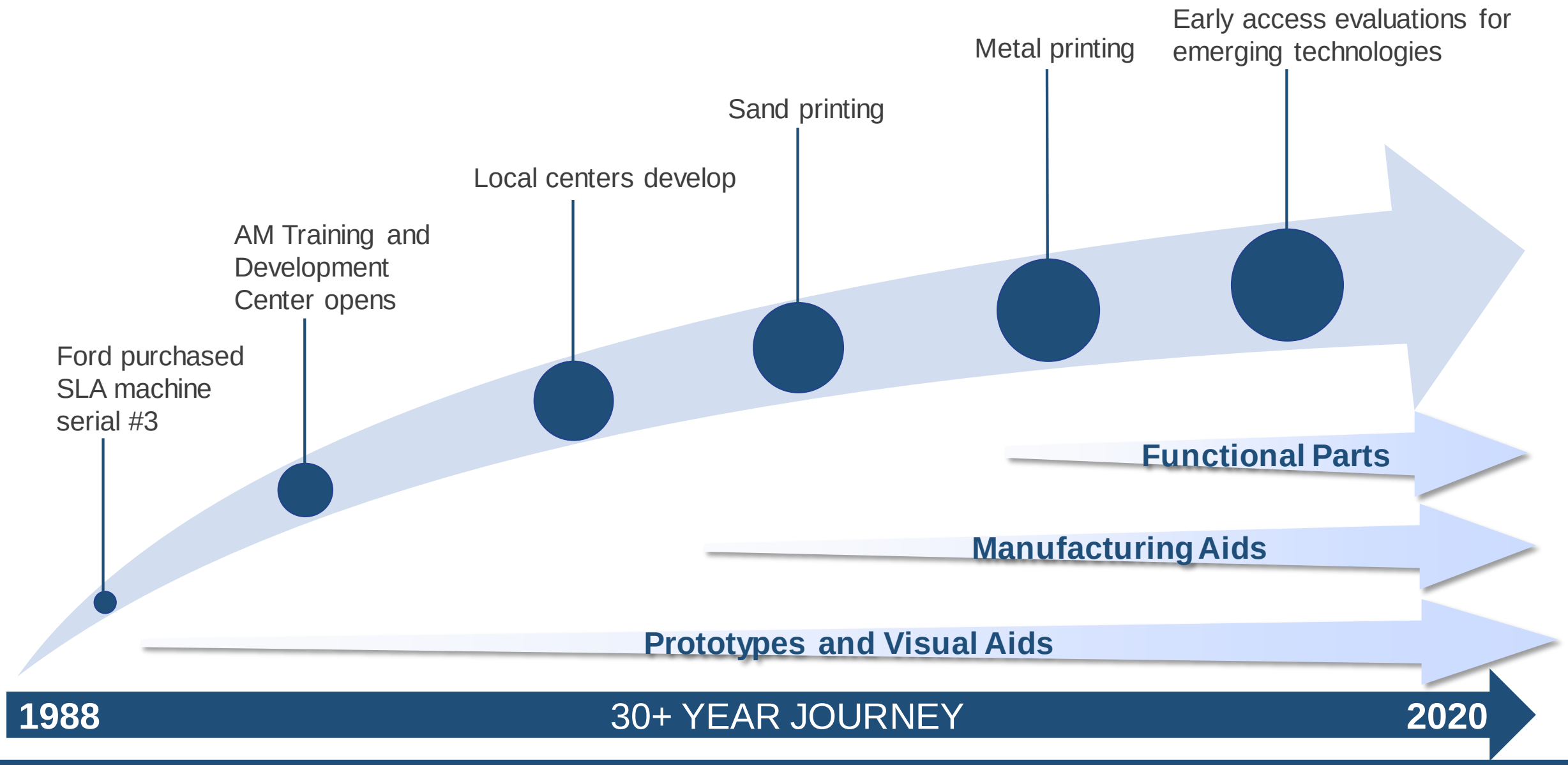

ADDITIVE MANUFACTURING AT FORD TODAY

- **Advanced Manufacturing**
  - Co-location of research, manufacturing, product development
  - Industry 4.0 and the digital factory

- **Research**
  - Materials development
  - Process development
  - Validation
- **Product Development**
  - Design for AM
  - Implementation

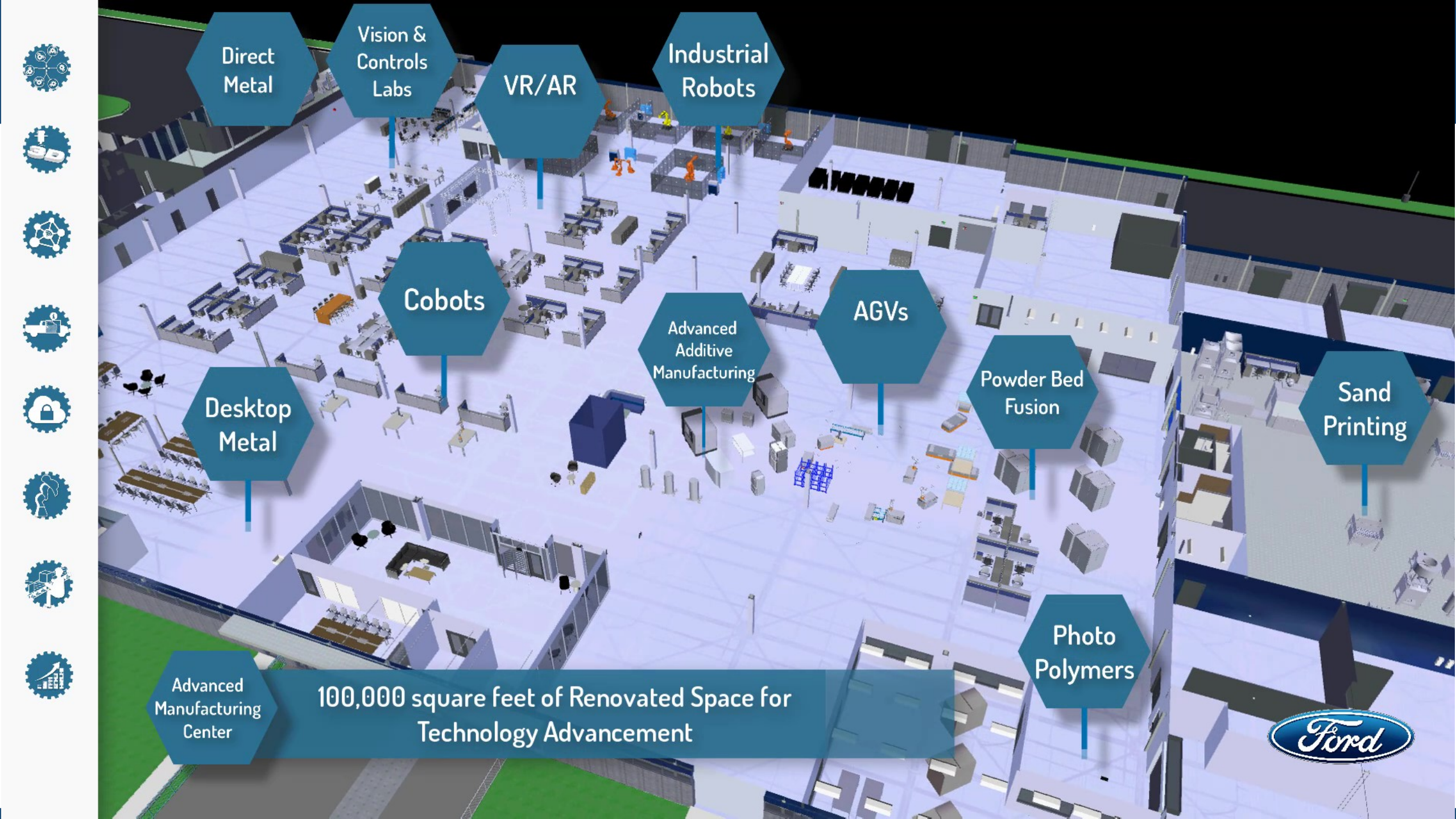
Direct Metal
Vision & Controls Labs
VR/AR
Industrial Robots
Cobots
Advanced Additive Manufacturing
AGVs
Desktop Metal
Powder Bed Fusion
Sand Printing
Photo Polymers
Advanced Manufacturing Center
100,000 square feet of Renovated Space for Technology Advancement
Ford

TODAY: MANUFACTURING FLOOR

80+ kg

10 kg

1.9 kg

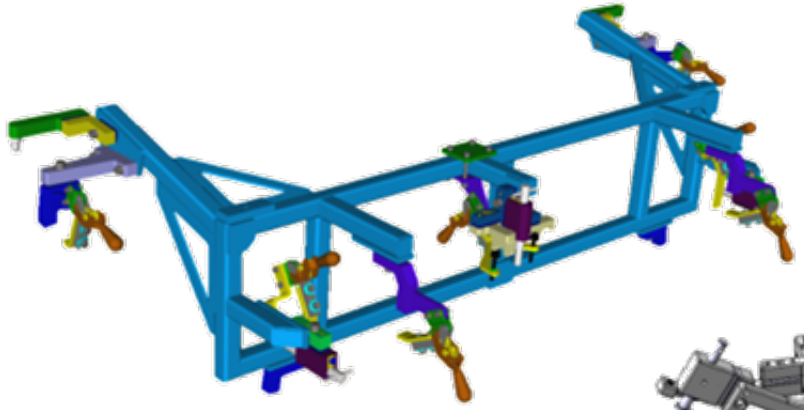

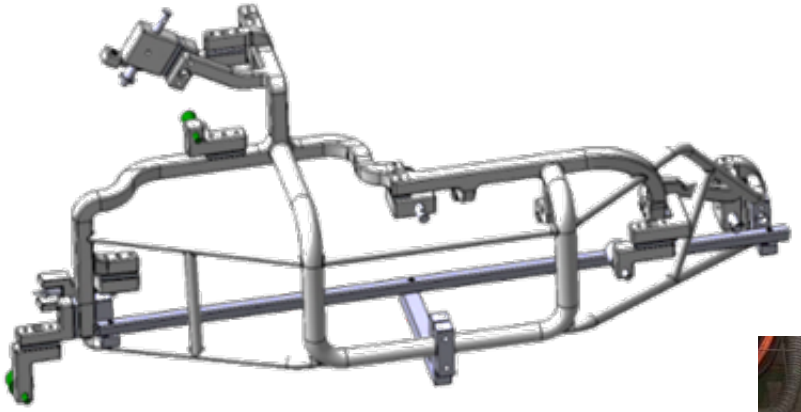

90%

Weight Reduction

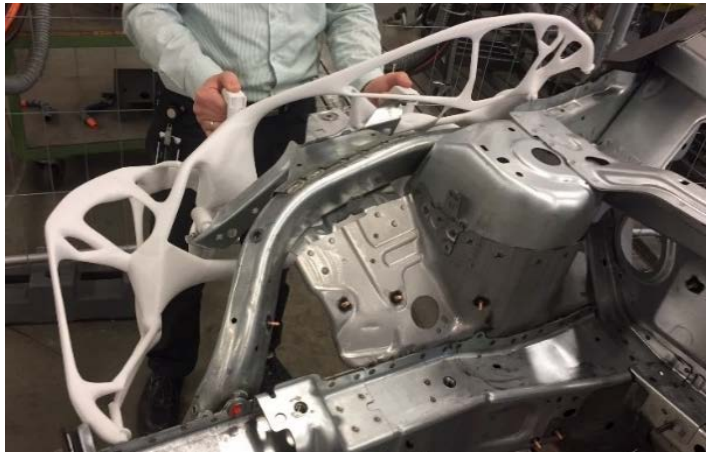

TODAY: PERSONALIZATION AND CUSTOMIZATION

TODAY: NICHE MARKETS

- **F-150 Raptor Auxiliary Plug**
- Special requirement for **niche market** — China
- 14 design **iterations** in 19 days
- **Customized** aesthetic with logo and texture
- Appearance **requirements met** without secondary coating

TODAY: SPARE PARTS

- **Focus HVAC lever arm service parts**
- **Eliminated inventory** and warehouse requirements
- **Reduced lead time** by 50%
- **Reduced minimum order quantities**

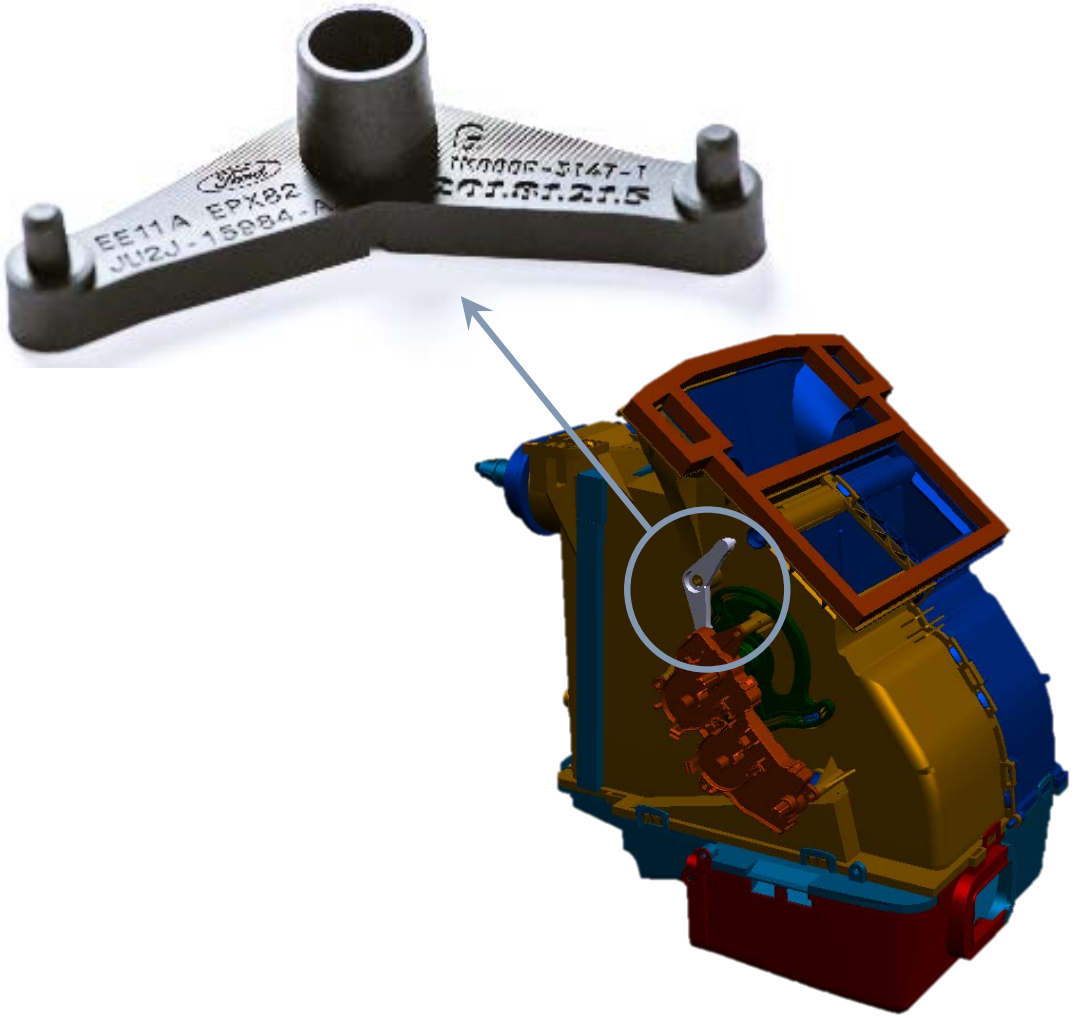

TODAY: SERIES PRODUCTION

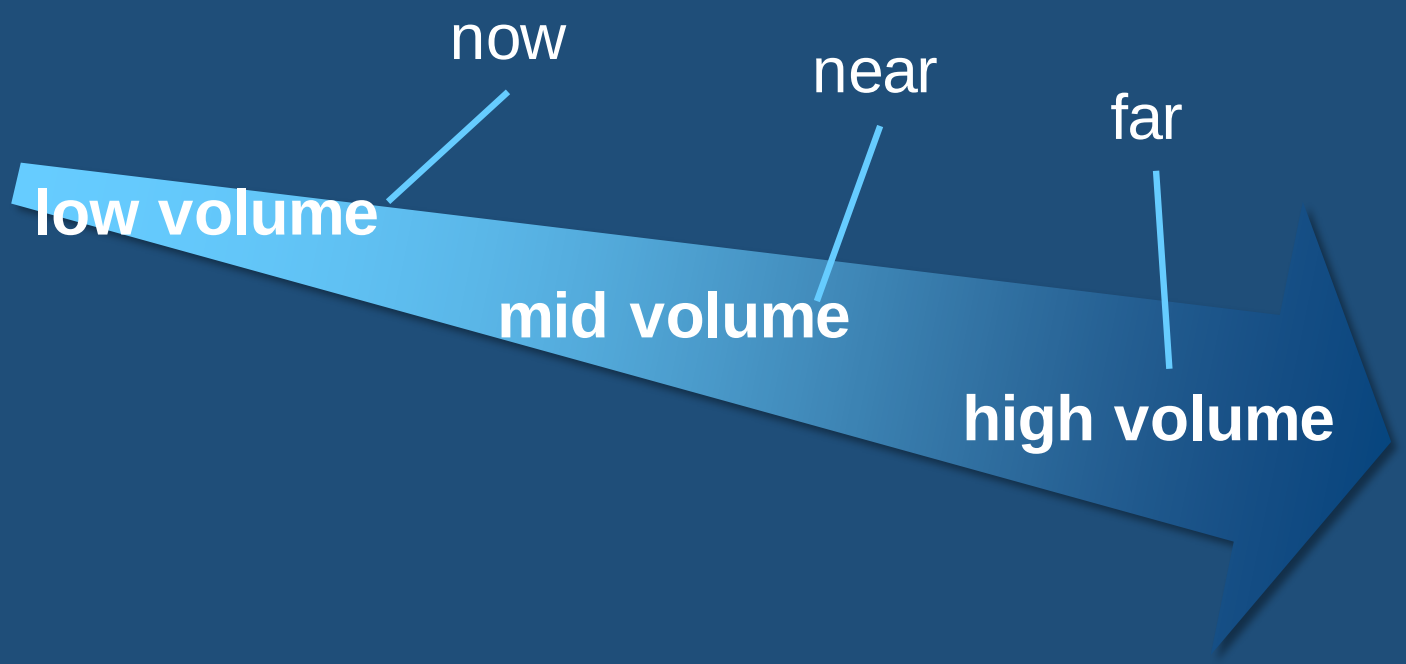

CASE STUDY: SERIES PRODUCTION

- **Mustang GT500 Electric Parking Brake Bracket**
- Convert from metal to plastic

  >60% **weight reduction**
- **Cost savings** compared to tooled part
- **Reduced complexity**

  RH/LH to mono design
- **Quick iterations**/validation

  to improve design and performance

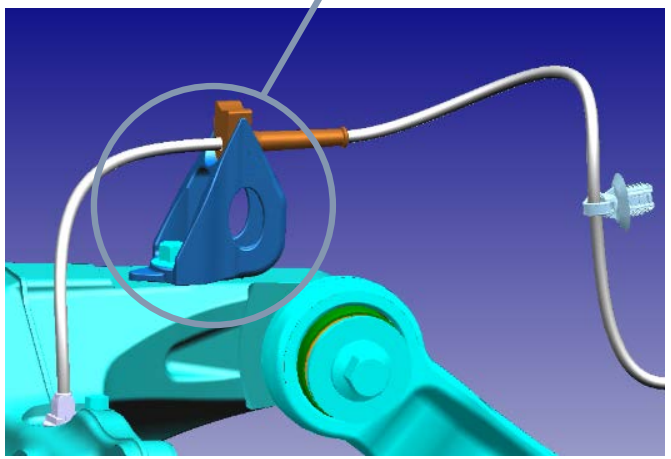

CASE STUDY: MATERIAL VALIDATION

- **Interior Weathering:**
  - Short-term heat exposure: tensile, impact, appearance
  - Long-term heat exposure
  - UV stability
- **Fogging:** SAEJ1756
- **Odor:** Ford standard

- **Flammability:** ISO 3795
- **Fluid & Chemical Resistance:** USCAR2
- **Retains Properties After:**
  - Heat aging @ 125C
  - Temp/humidity cycling
  - Thermal shock (-40°C to 125°C)

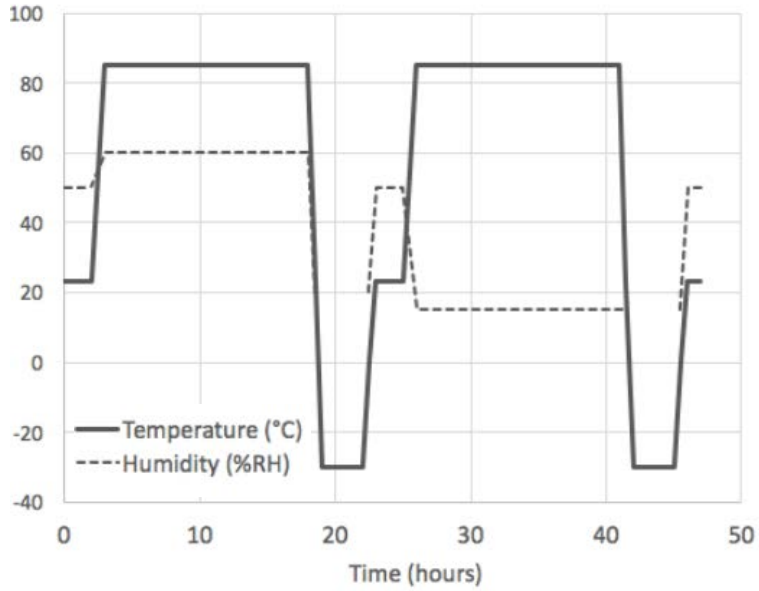

Temp/humidity cycling schedule: cycle repeated 4x, 240 hours total

CASE STUDY: FUNCTIONAL VALIDATION

- Component-level testing:
  - Benchtop **vibrational** test
- Vehicle-level testing:
  - **Track car** testing
- Assembly-level testing:
  - **Ergonomic** testing
  - **Torque** testing
- Quickly modified designs to address opportunities to improve

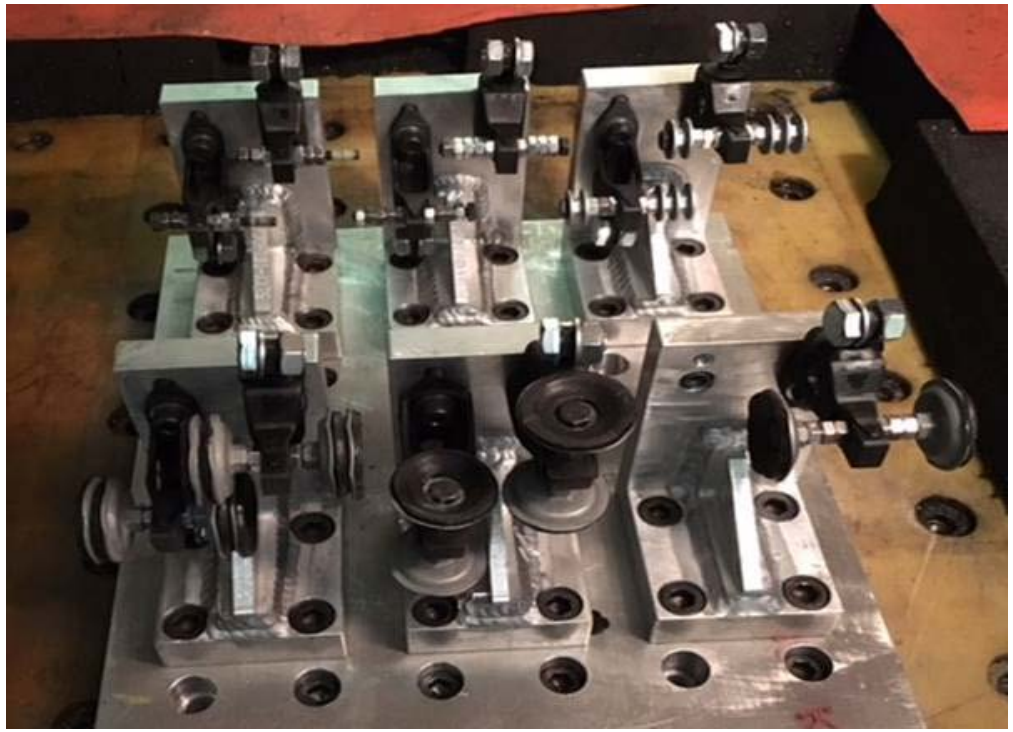

AM Parts Require Same DV Testing as Conventional

CASE STUDY: MANUFACTURING VALIDATION

- **Designed for AM** and optimized function
- Ford validated **minimal variation** from print to print
- Created **DFMEA** for each part based on engineering requirements
- Created new **PFMEA**
- Followed **standard automotive PPAP** process

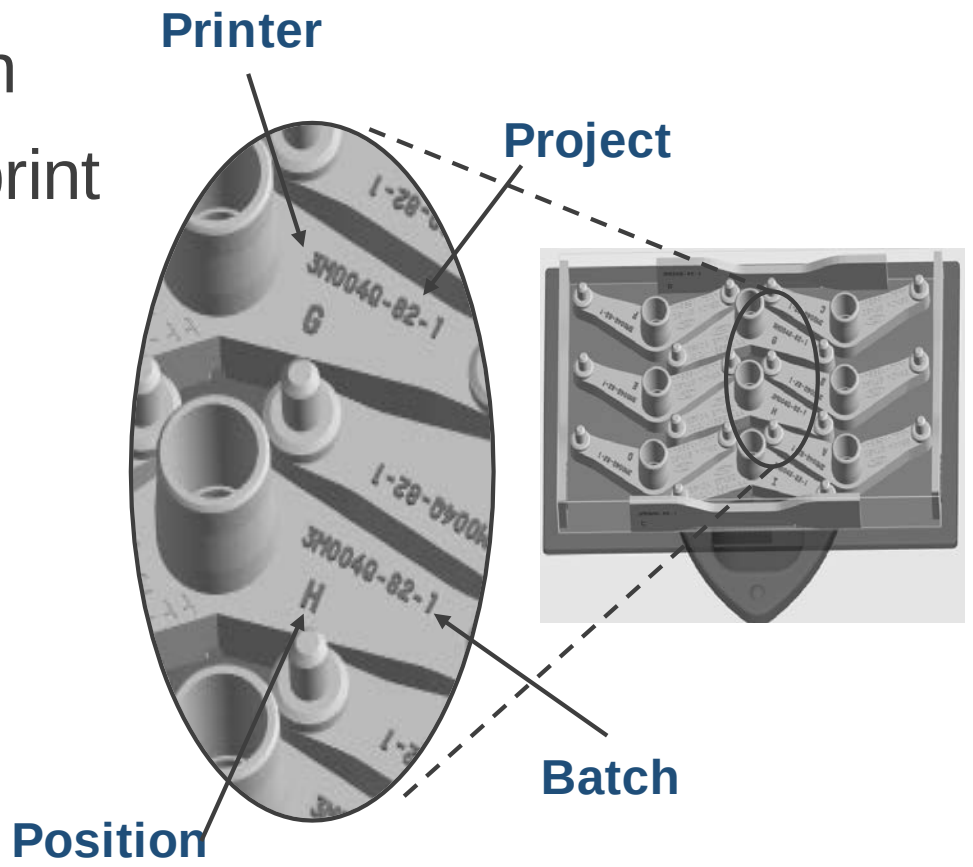

Generalized AM Process That Meets Ford Quality Standards

BRIDGING THE GAPS FOR TOMORROW

- Speed / cycle time
  - Hours/minutes versus minutes/seconds per part
  - Limited build envelopes
- Materials
  - Lack of automotive grade materials
  - Locked or closed systems
  - Cost
- Design
  - CAE tools for simulation and design
  - Mindset shift in design for AM guidelines

BRIDGING THE GAPS FOR TOMORROW

- Security throughout digital thread and cloud based software
  - Protecting ideas, design, counterfeit parts
- Data and computing power
  - Volumes of data, process control, data analytics
  - Data formats / file types and compatibility
- Education and training
  - Develop the pipeline
  - Engineering workforce
  - Manufacturing workforce

BRIDGING THE GAPS FOR TOMORROW

New Sources of Value

Service parts / low-volume production

Series production

Mass customization

Distributed manufacturing

New Capabilities

Emerging AM technologies

Automotive grade materials

Software: design and simulation tools

End-to-end automation

ACKNOWLEDGMENTS

- Research & Advanced Engineering
- Materials Engineering
- Product Development
- Ford Performance
- FCSD (Ford Customer Service Division)
- Advanced Manufacturing
- Supplier Technical Assistance

Questions?

Ellen C. Lee
elee9@ford.com